INSTALLATION GUIDE

WSC43BA Thermostat

Wolf Steel Ltd., 24 Napoleon Rd., Barrie, ON, L4M 0G8 Canada / 103 Miller Drive, Crittenden, Kentucky, USA, 41030
Phone 1 (866) 820-8686 • www.napoleon.com • hvac@napoleon.com

W415-4094 / 06.10.22

safety handling

⚠ WARNING

- Failure to follow these safety notices could result in fire, electric shock, other injuries, or damage to the thermostat and other property. Read all the safety notices below before using the thermostat.

- Avoid high humidity or extreme temperatures.
- Avoid long exposure to direct sunlight or strong ultraviolet light.
- Do not drop or expose the unit to intense vibration.
- Do not disassemble or try to repair the unit on your own.
- Do not expose the unit or its accessories to flammable liquids, gases, or other explosives.

Product Name	Model Number	FCC ID	IC ID
Touchscreen Thermostat	WSC43BA	VA8-WSC43BA	7114A-WSC43BA
Indoor PIR Temperature Sensor	WSC-IS	VA8-WSC-IS	7114A-WSCIS
Outdoor Temperature Sensor with Probe	WSC-OS		
Thermostat Power Module (not included)	WSC-PWRM	N/A	

This device complies with Part 15 of the FCC Rules. Operation is subject to the following two conditions: 1) The device may not cause harmful interference; and 2) the device must accept any interference received, including interference that may cause undesired operation.

table of contents

EN

1.0 welcome 4

2.0 in the box 4

3.0 wiring diagrams 5

4.0 installation guide 8

4.1 removing your old thermostat 8

4.2 connecting the wires 11

4.2.1 install the thermostat with a C-wire 12

4.2.2 install the thermostat without a C-wire (optional) 16

5.0 FAQs 25

6.0 technical specifications 28

7.0 home app 31

8.0 meet your thermostat 35

8.1 device overview 35

9.0 app overview 49

NOTE: The information throughout this manual is believed to be correct at the time of printing. Wolf Steel Ltd. reserves the right to change or modify any information within this manual at any time without notice. Changes, other than editorial, are denoted by a vertical line in the margin.

1.0 welcome

The thermostat makes it easier and smarter to control your household temperature. You can control and switch easily between dual fuel sources using custom hybrid heating modes. With the help of indoor and outdoor sensors, you can balance hot or cold spots throughout the home to achieve best comfort or select specific sensors for target temperatures. You can also set schedules for your thermostat, so it operates automatically based on the selected time periods and settings.

2.0 in the box

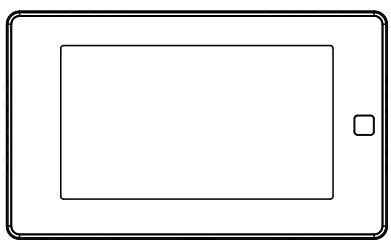

WSC43BA Thermostat

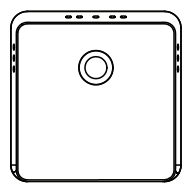

Indoor Sensor
(WSC-IS)

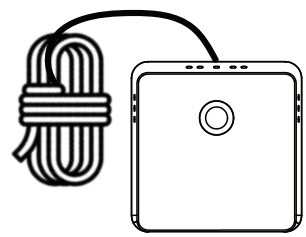

Outdoor Sensor

Installation &
User Guide

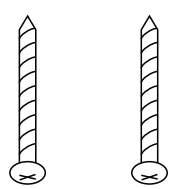

6 x Screws

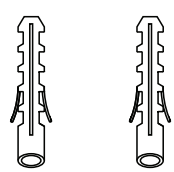

6 x Drywall
Plugs

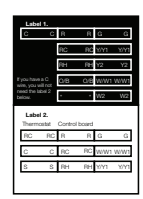

Wire Tags

3.0 wiring diagrams

EN

Below are the wiring diagrams for common HVAC equipment.

Conventional Heating and Cooling System

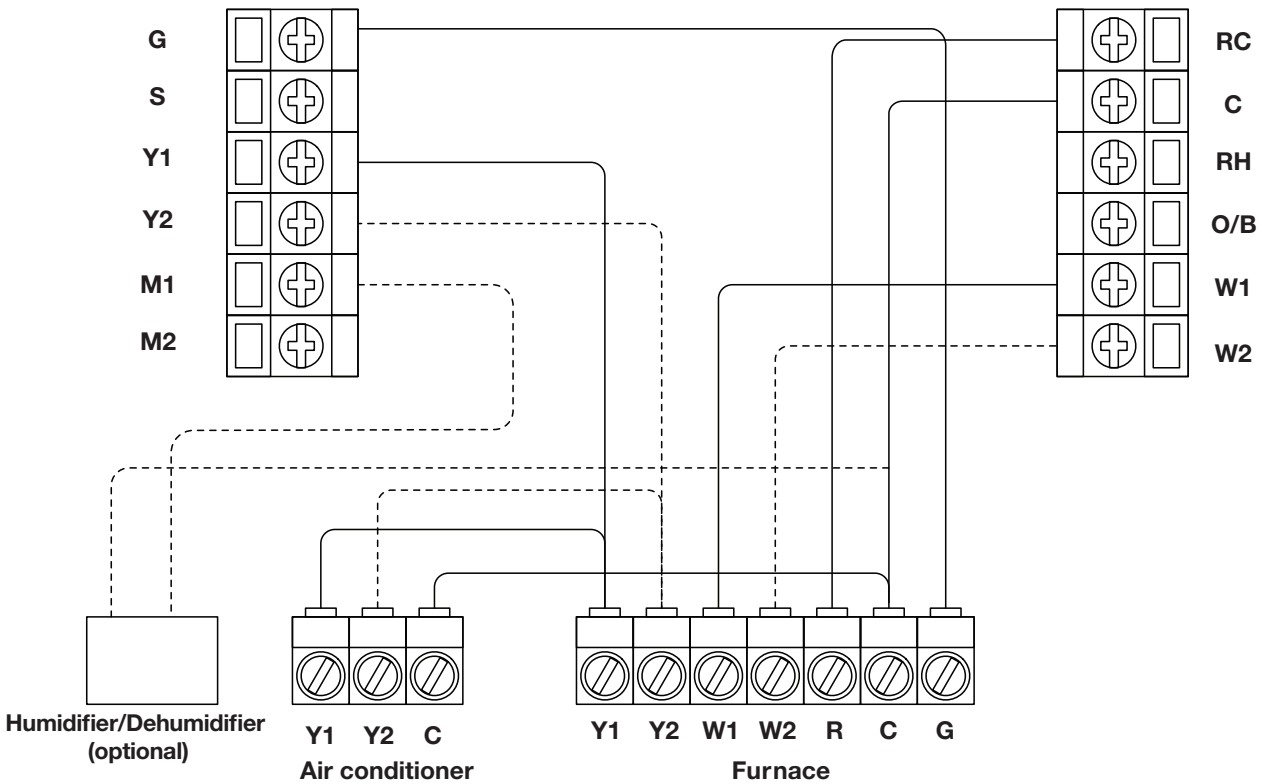

- - - - - - - - - - - - - - - For dual heat and cooling system, if applicable.

Remove the jumper between Rh, Rc, or R terminals. Adjust the DIP switch on the back of the thermostat to “Disconnect” if you have connected both RC-wire and RH-wire to the wall-plate. Otherwise, switch it to the “Connect” side.

wiring diagrams

Heat Pump (Air or Geothermal) with Auxiliary Heat

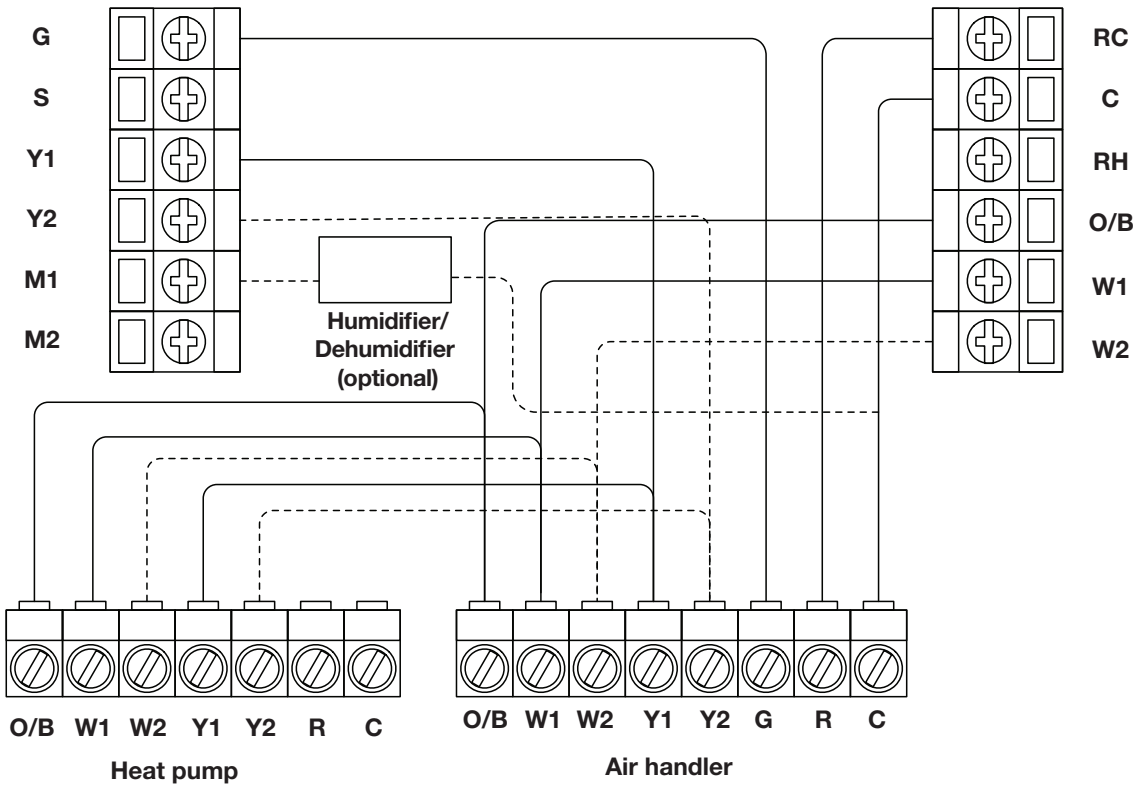

- - - - - - - - - - - - - - - For dual heat and cooling system, if applicable.

Remove the jumper between Rh, Rc, or R terminals. Adjust the DIP switch on the back of the thermostat to “Disconnect” if you have connected both RC-wire and RH-wire to the wall-plate. Otherwise, switch it to the “Connect” side.

Boiler or Radiant System with Air Handler and Conventional Cooling or Heat Pump

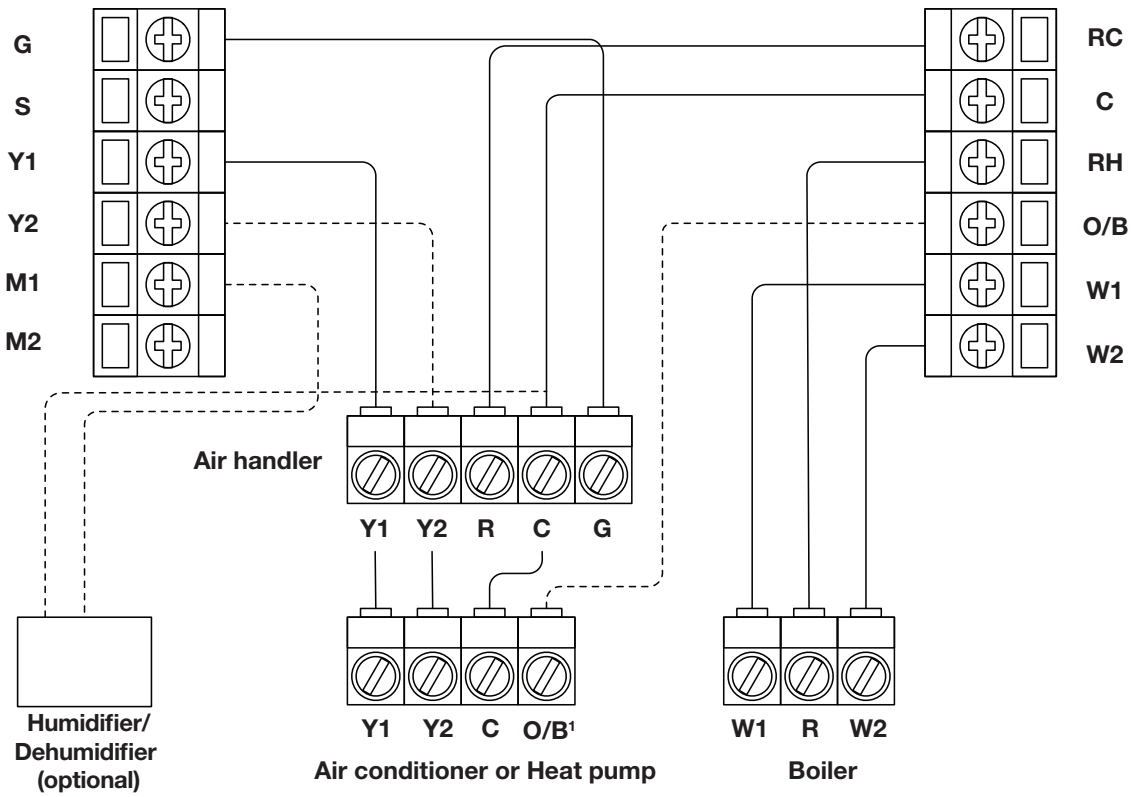

- - - - - - - - - - - - - - - For dual heat and cooling system, if applicable.

1 For heat pump only.

Remove the jumper between Rh, Rc, or R terminals. Adjust the DIP switch on the back of the thermostat to “Disconnect” if you have connected both RC-wire and RH-wire to the wall-plate. Otherwise, switch it to the “Connect” side.

4.0 installation guide

4.1 removing your old thermostat

Step 1: Switch off your HVAC system

Before you start, please switch off your HVAC system to protect you and to avoid blowing a fuse. Wait a few minutes, then try to adjust the temperature of your old thermostat to verify that the system is off.

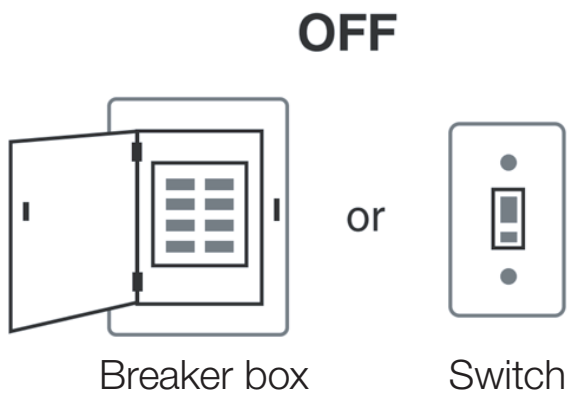

Step 2: Remove the old thermostat

Remove the old thermostat from the wall. Keep the wall-plate with wires.

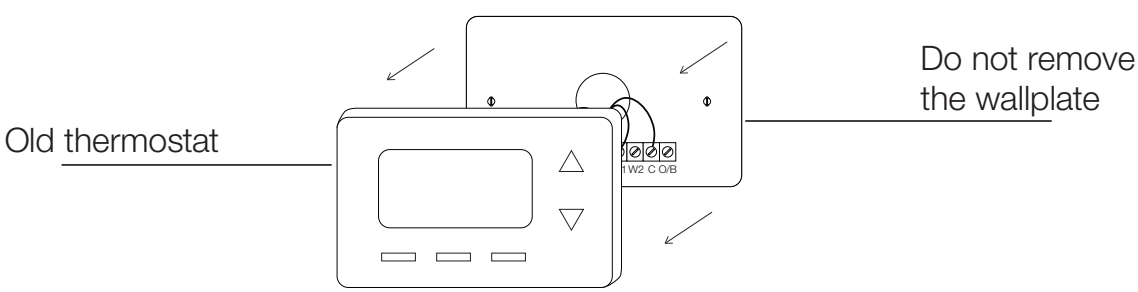

Step 3: Compatibility check

If you find a thick wire with wire nuts on the backplate of the old thermostat, or if the voltage of your old system is 120V or higher, it will not be compatible with WSC43BA. If none of the above is true, please proceed to the next step.

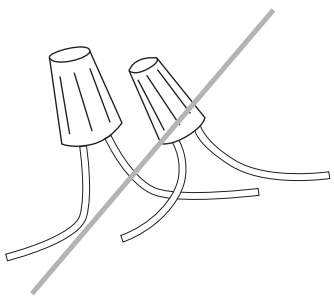

OR

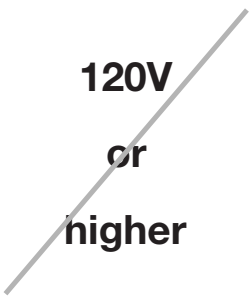

Step 4: Take a photo

Take a photo of the wires connected to the terminal of your old thermostat. You may need to reference this photo later.

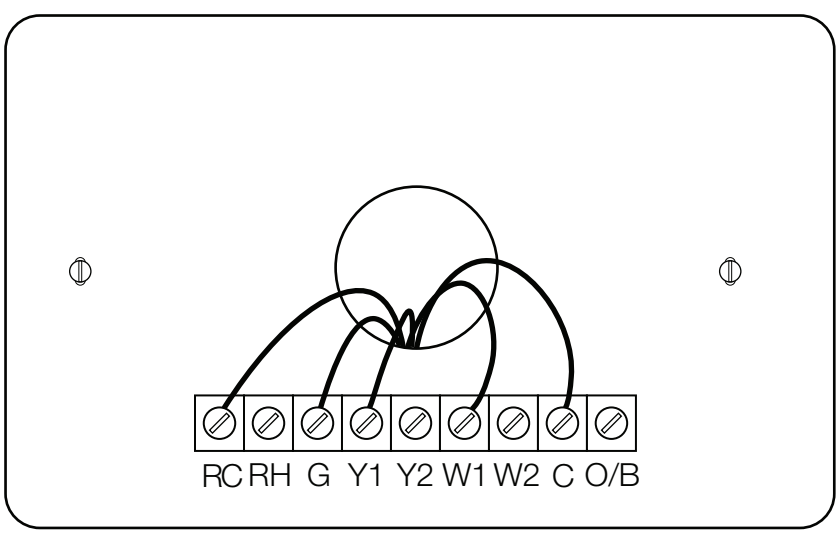

installation guide

Step 5: Label the wires with tags

Label each wire on the wall-plate with the tags **(label 1)** provided, then carefully disconnect the wires.

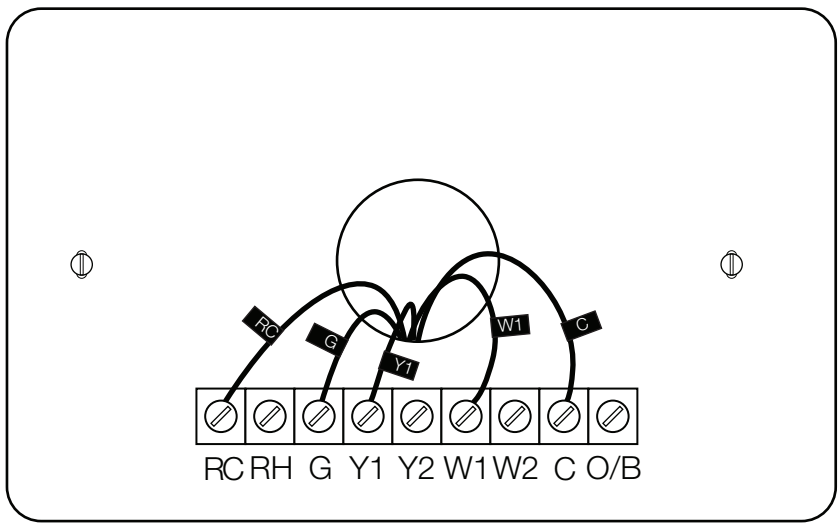

NOTE: If there are any jumper wires between **Rh**, **Rc**, or **R** terminals, do not label them. WSC43BA does not need jumpers. Remove and save them, along with your old thermostat.
NOTE: For unique wiring situations, see “Wiring Diagrams” section.

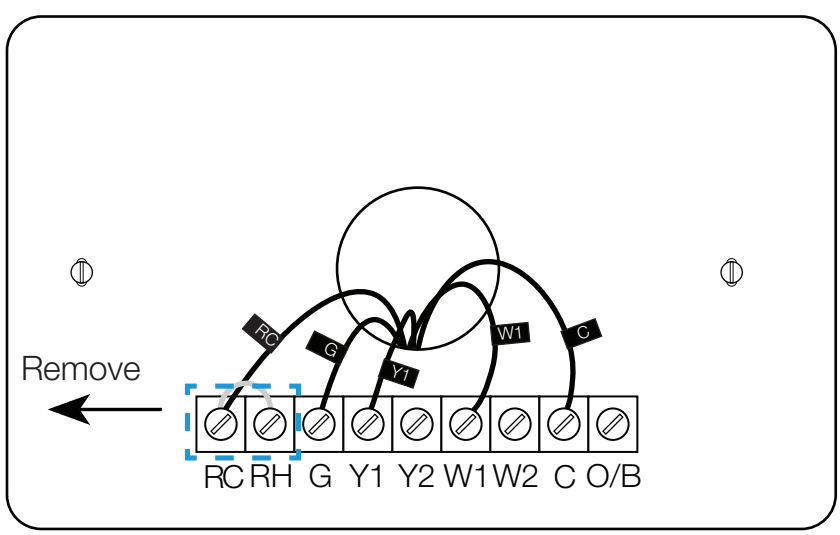

4.2 connecting the wires

Do you have a C-wire connected to your old thermostat?

YES = See 4.2.1 **NO = See 4.2.2**

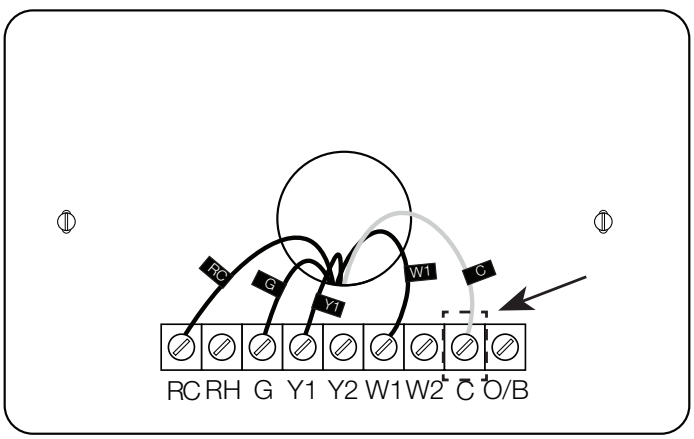

Terminal Designation

Terminals	What It Means
RC	24VAC primary for cooling
RH	24VAC primary for heating
C	24VAC common
W1	1st stage primary heating relay/AUX heat
W2	2nd stage secondary heating relay/AUX heat
Y1	1st stage primary compressor contactor
Y2	2nd stage secondary compressor contactor
G	Fan relay
O/B	Changeover valve for heat pumps
S	Optional wiring module terminal to combine Y and G, while reserving an extra in-wall wire to power on the thermostat

installation guide

4.2.1 install the thermostat with a C-wire

Step 1: Remove the wall-plate

Unscrew the wall-plate from the wall, then gently pull it out to ensure the wires will not fall back into the hole.

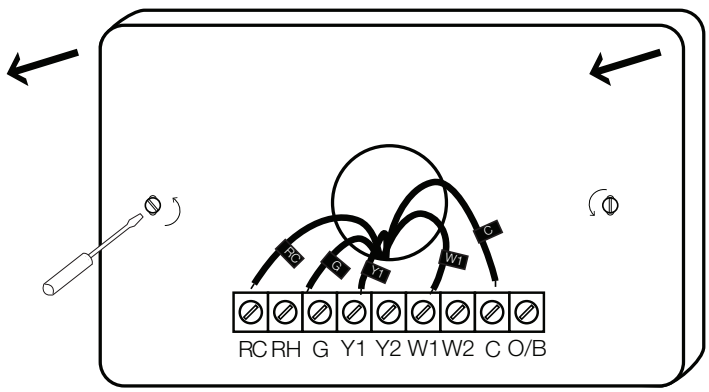

Step 2: Attach the base of WSC43BA to the wall

Bundle and insert the wires through the holes of the base of WSC43BA, then attach the base to the wall with screws (supplied).

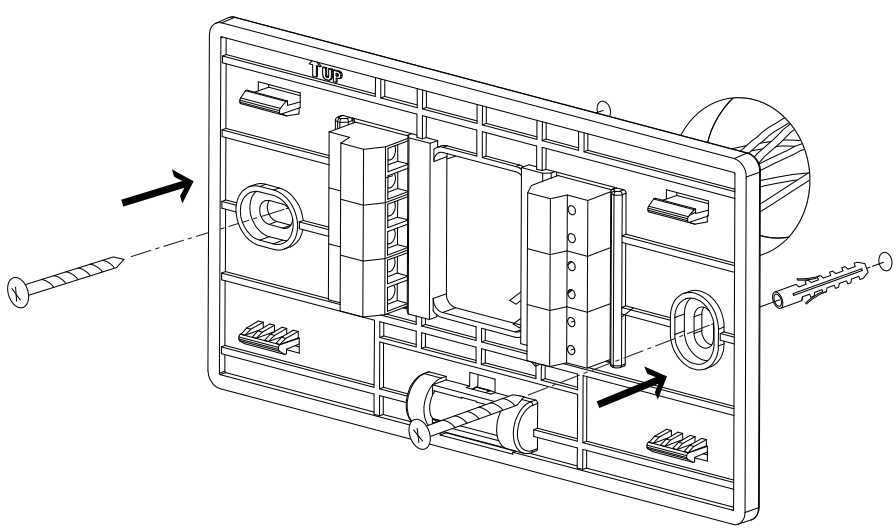

Step 3: Connect the wires

Connect the wires to the corresponding terminal in the base. Take a photo of the wires when you are finished. You may need to refer to it later during the setup wizard.

Do you have more than one R-wire (**R**, **RC**, or **RH**)?

YES

R- or RC-wire into the RC terminal
RH-wire into the RH terminal

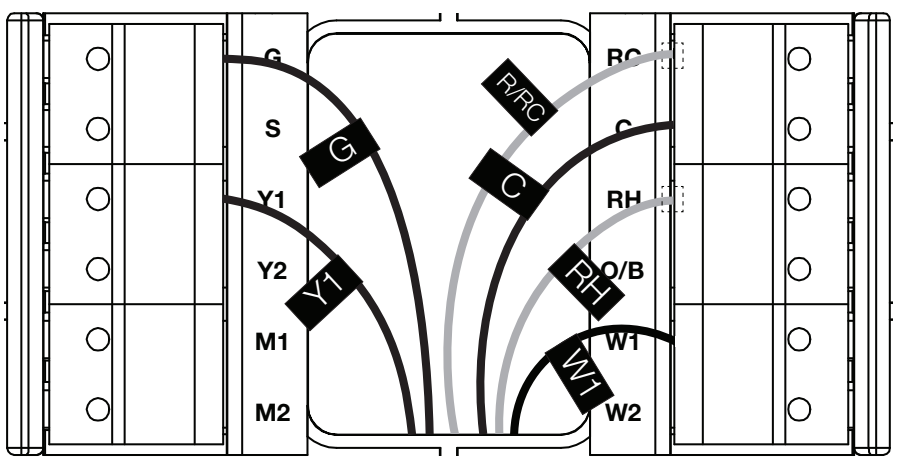

NO

R-, RC-, or RH-wire into the RC terminal

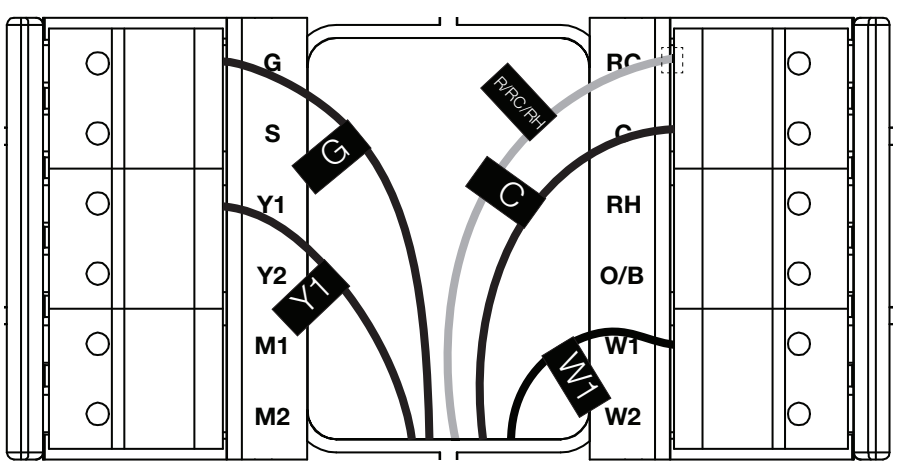

Step 4: DIP switch

Adjust the DIP switch on the back of the thermostat to “Disconnect” if you have connected the RC-wire and the RH-wire to the wall-plate. Otherwise, switch it to the “Connect” side.

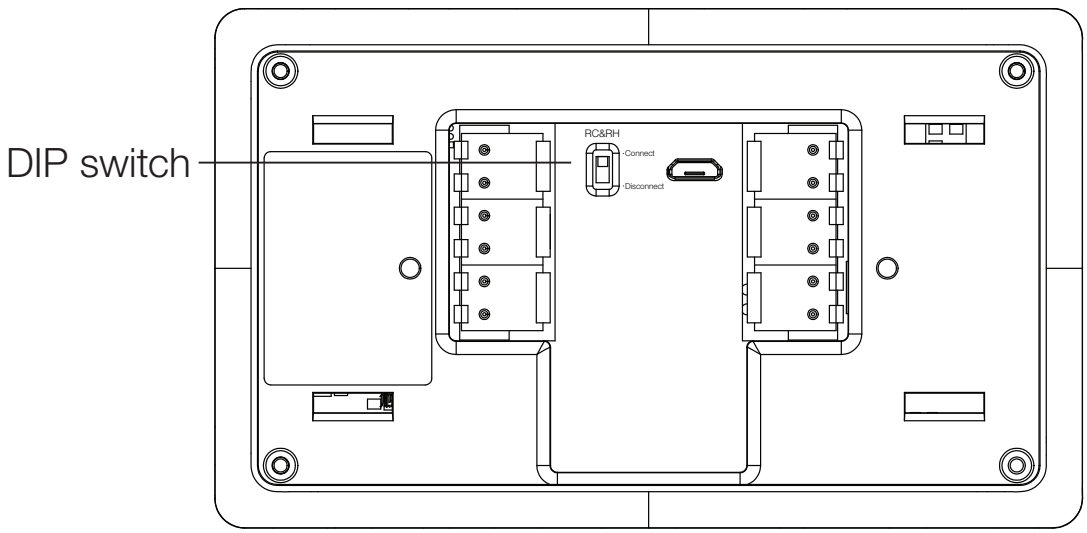

Step 5: Attach the WSC43BA to the base

Gently press the WSC43BA into the base until it clicks.

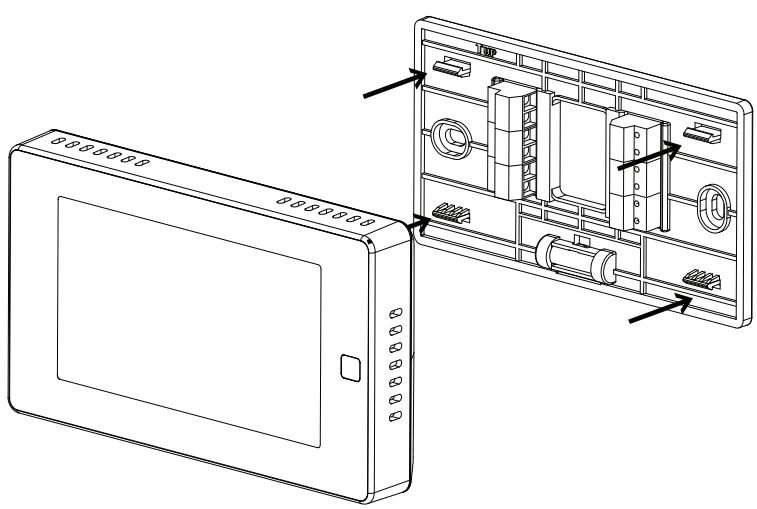

Step 6: Power on your system

Congratulations! The installation is finished. Please power on your HVAC system.

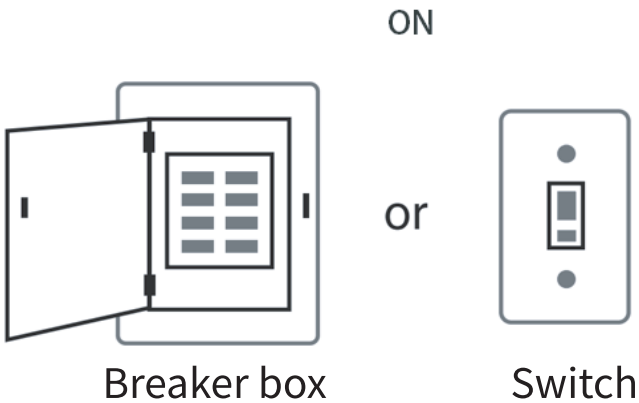

When the power is successfully energized, the thermostat's screen will light up and go into the setup wizard. You can complete the following configuration according to section 4.

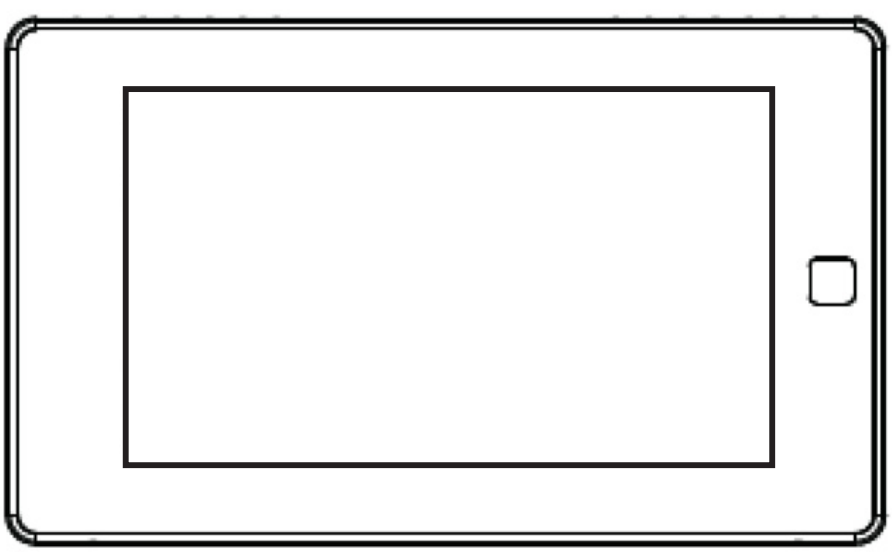

installation guide

4.2.2 install the thermostat without a C-wire (optional)

WSC-PWRM
Power Module →
(Not Included)

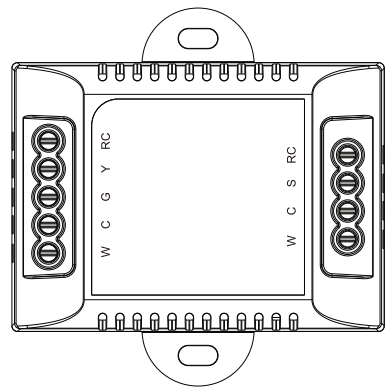

Power module requires your system to have the following wires:

- 4 wires: **W/W1**, **Y/Y1**, **G**, and **R** (or **Rc** or **Rh**)
- Or 3 wires: **Y/Y1**, **G**, and **R** (or **Rc** or **Rh**)

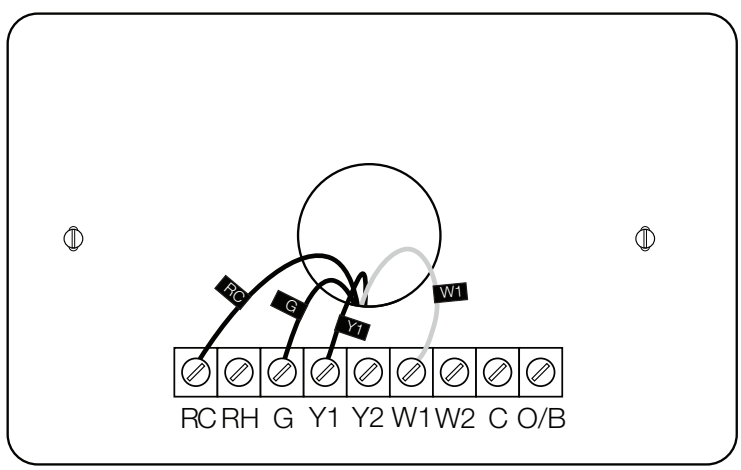

If you do not have these wires, your system may not be compatible with the power module.

Description:

The C-wire is used to provide power to the thermostat. If your system does not have a C-wire, you can use the power module to power your thermostat, using the existing wires.

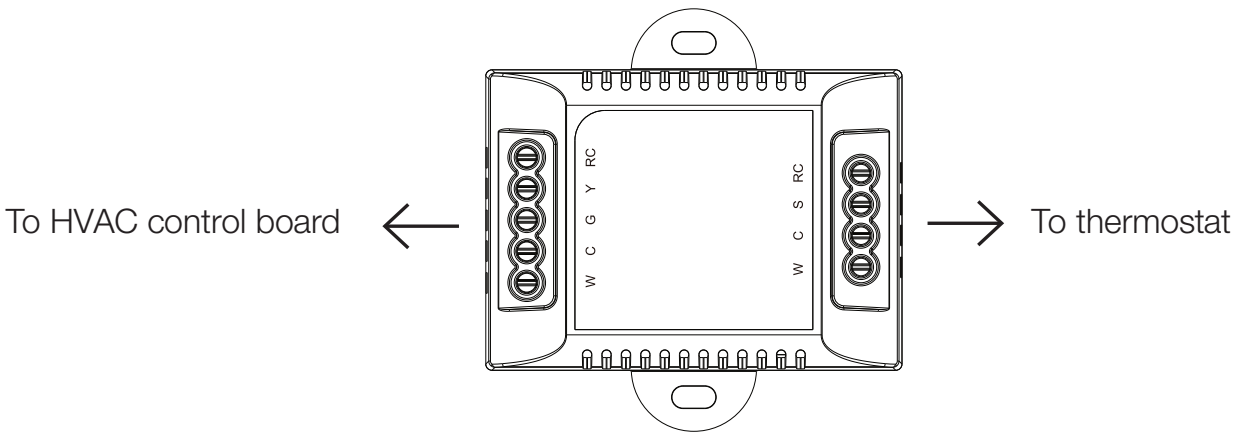

Power module

There are two sides with connections. One side (4 terminals) is for thermostat connections; the other side, pre-wired (5 terminals), is for the control board connections.

installation guide

Step 1: Find the HVAC terminals

Find the control board of your HVAC system. Open your HVAC system's cover and take a photo of the wires connected to the terminals of your old thermostat. You may need to reference this photo later.

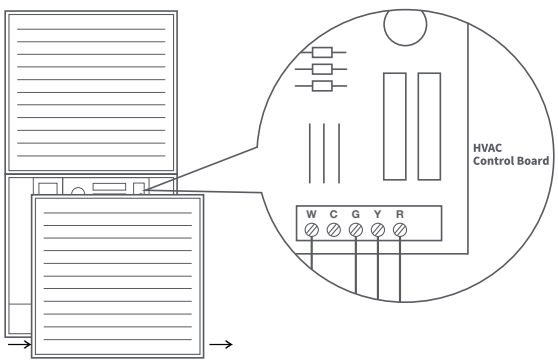

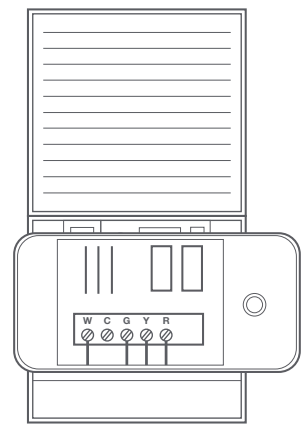

Step 2: Label the wires

Label only the wires from the control board to your old thermostat with the tags provided **(label 2 control board)**.

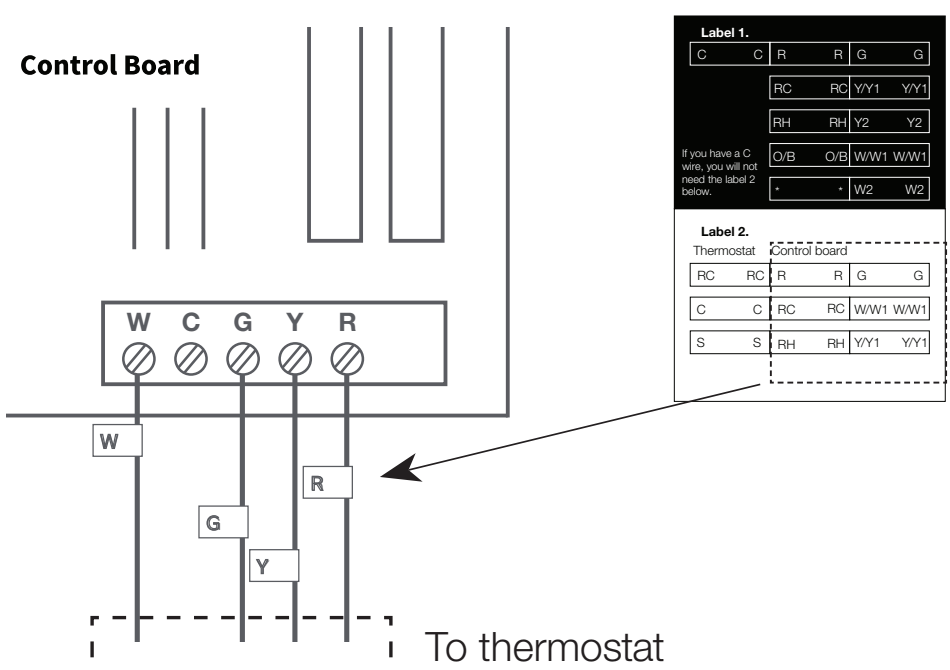

Step 3: Disconnect the wires

Disconnect the W/W1, G, Y/Y1, and R wires from the control board.

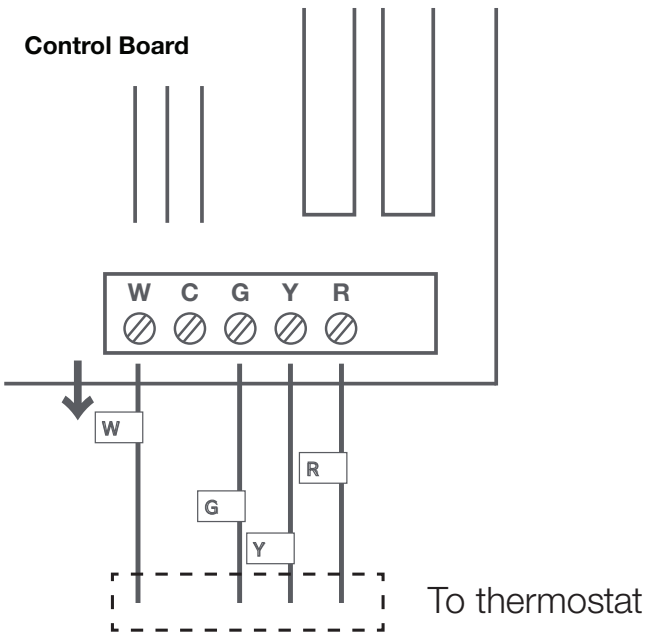

Step 4: Connect the wiring module

Reconnect them correspondingly to the 4 terminals side of the power module.

R -> RC || W/W1 -> W || G -> C || Y/Y1 -> S

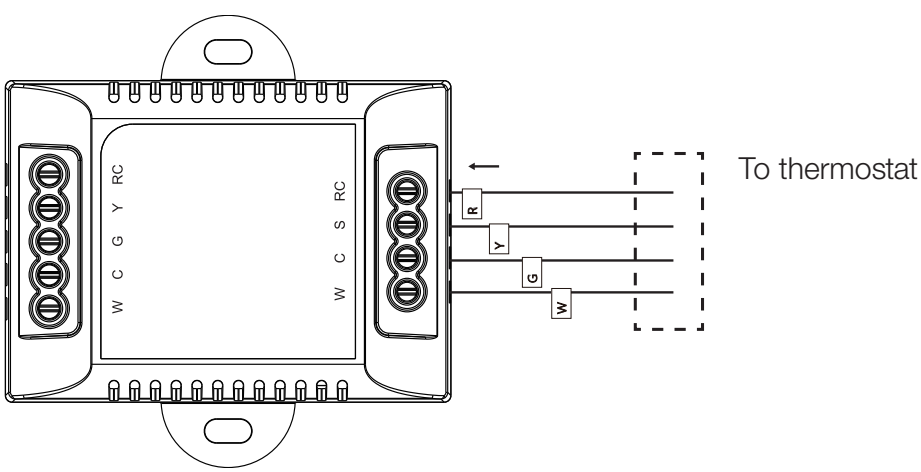

Power module

installation guide

Step 5: Connect the wires

Generally, the control board will have W, C, G, Y, and R terminals. Connect the pre-wired side of the power module (5 terminals) to the corresponding terminals.

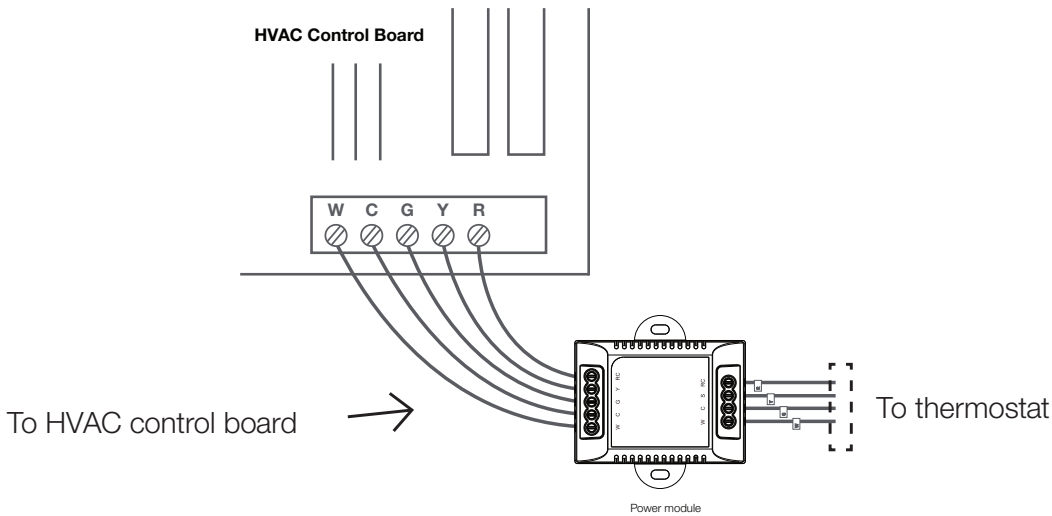

Step 6: Position the wiring module

The power module should be installed between your thermostat wiring and your control board. Install it in the right position, then close the HVAC cover panel securely and return to your thermostat.

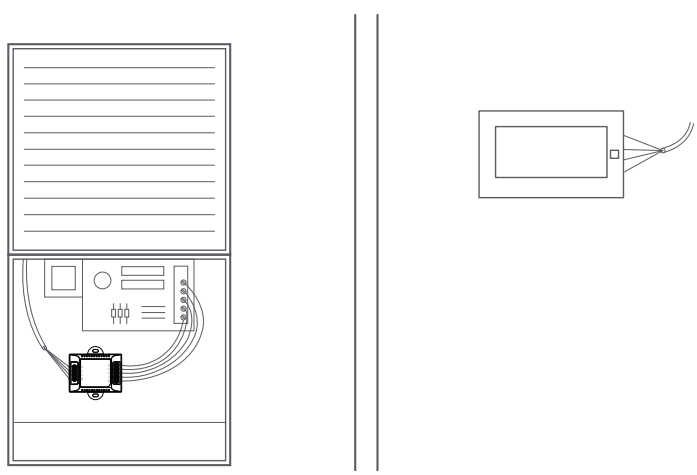

Step 7: Add new tags

Add new tags to the following tags to simplify your wiring:

R/RC/RH -> RC || G -> C || Y/Y1 -> S

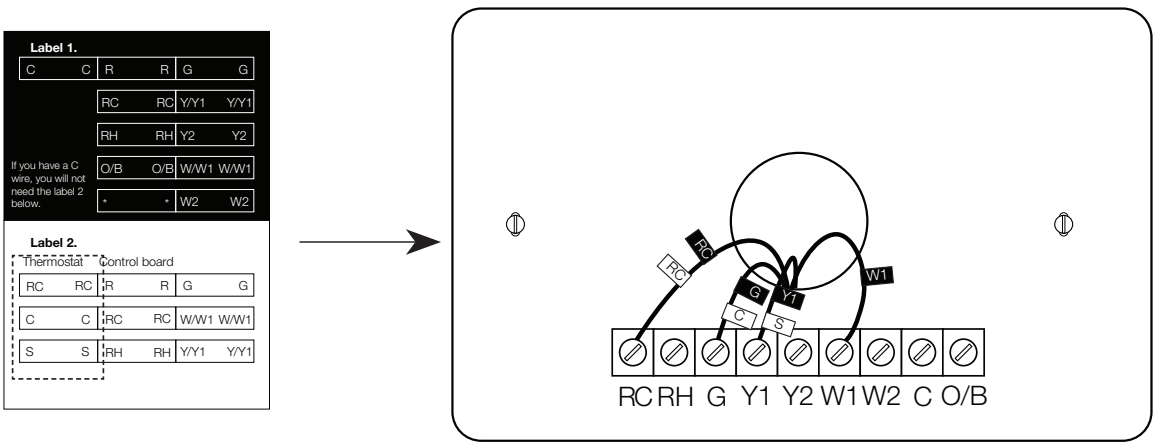

Step 8: Remove the wall-plate

Unscrew the wall-plate from the wall, then gently pull it out and ensure the wires will not fall back into the hole.

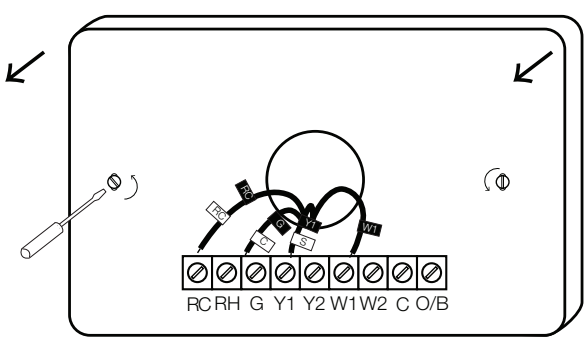

installation guide

Step 9: Attach the base of WSC43BA to the wall

Bundle and insert the wires through the holes of the base of WSC43BA, then attach the base to the wall with screws (supplied).

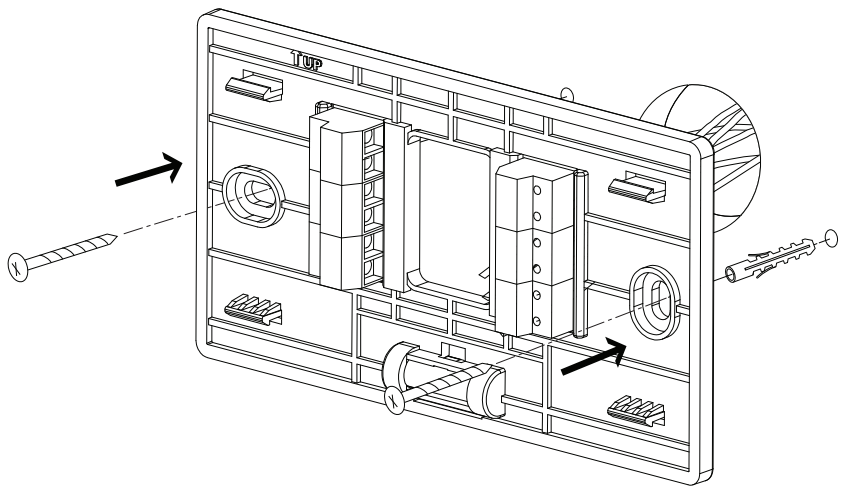

Step 10: Connect the wires

First, connect 3 wires as shown below.

RC, C, S

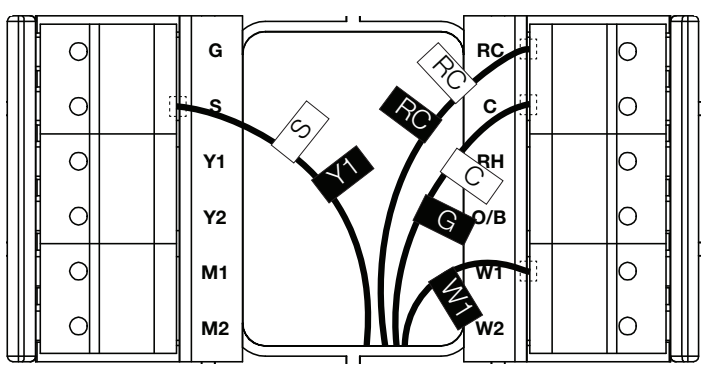

Then connect other wires to the corresponding terminal in the base. Take a photo of the wires when you are finished. You may need to refer to it later during the setup wizard.

Step 11: DIP switch

Adjust the DIP switch on the back of the thermostat to the "Connect" side.

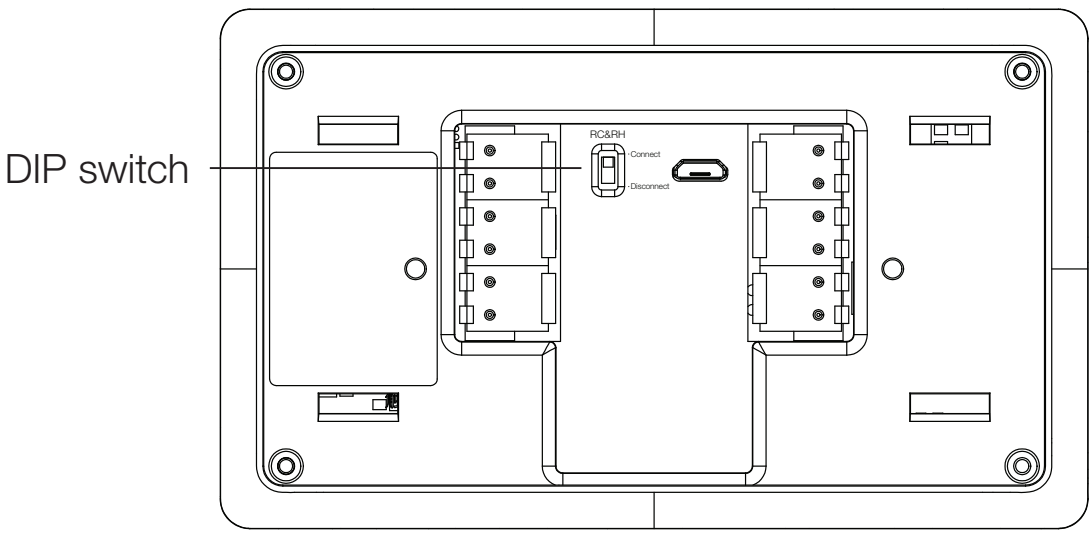

Step 12: Attach the WSC43BA to the base

Gently press the WSC43BA into the base until it clicks.

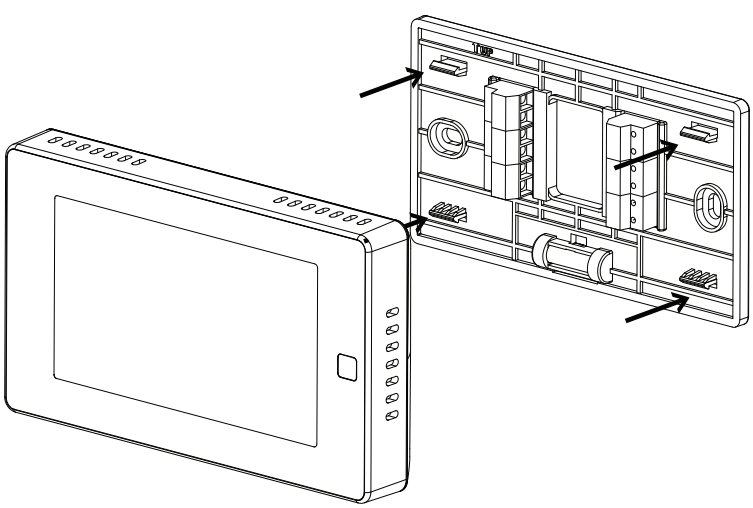

Step 13: Power on your system

Congratulations! The installation is finished. Please power on your HVAC system.

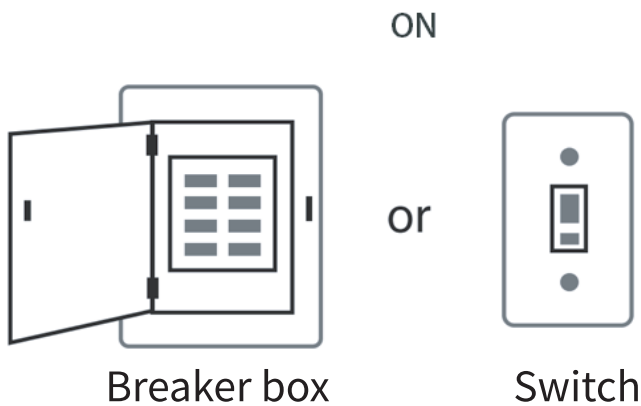

When the power is successfully energized, the thermostat's screen will light up and go into the setup wizard. You can complete the following configuration according to section 4.

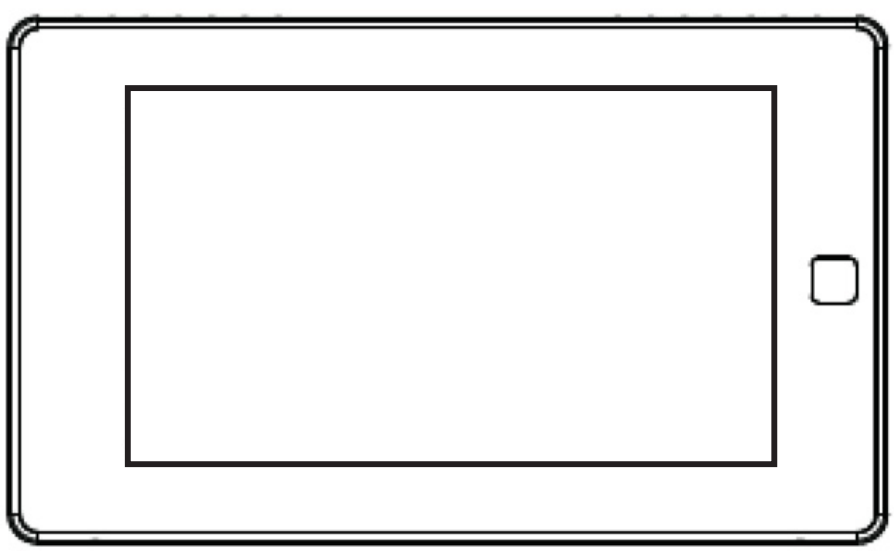

How to pair the thermostat with Indoor & Outdoor Sensors?

1. Click the "+" button at the top-right corner of the interface in **"Menu"** -> **"Sensors"** on the thermostat and tap **"Next"**.

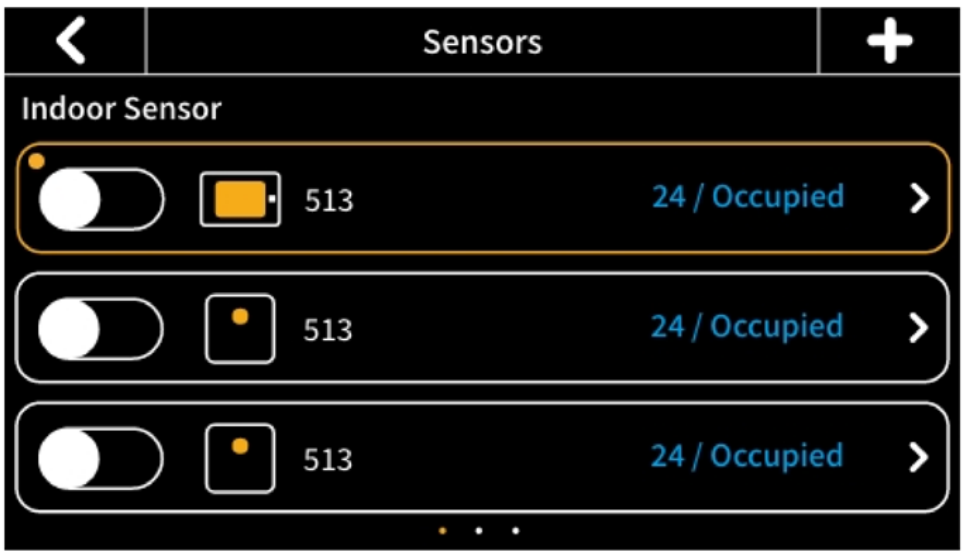

2. Remove the rear cover of the sensor.
3. Press and hold the button on the back of the sensor until the indicator on the front of the sensor flashes red.
4. Wait for sensors to pair automatically. When the pairing is successful, the sensor flashes green 3 times.
5. **For Outdoor Sensors only:** Place the temperature probe of the sensor outdoors while leaving the main body of the sensor indoors. Make sure the sensor is within 10 meters of the thermostat.

You can set the indoor remote sensor as the main sensor or to only participate in the calculation of the average temperature. (Only one sensor can be set as the main sensor at a time). With multiple indoor remote sensors, if one of them is set as the main sensor, the other indoor remote sensors and the built-in sensor will continue to participate, according to the different participation periods set. The thermostat will calculate the average temperature of all the sensors in the occupied state as a reference. If there is no one in the room where the sensor is located, that sensor will not participate in the calculation.

FAQs

What is the WiFi configuration if the thermostat fails?

1. Confirm the device, mobile phone, and router are as close as possible.
2. Confirm that the network is stable. Put the phone beside your device and ensure they are in the same network environment. Try to open a website to ensure the network can be used.
3. Confirm adding device is under 2.4G WiFi channel. If 2.4G and 5G WiFi use the same name, it is recommended to change one to a different name.
4. Confirm the entered router password is correct.
5. If it still does not work, it is recommended to reset the router and try again.

What if the device is offline?

1. Confirm if the thermostat is powered on.
2. Confirm if the device or the network has been cut off. If so, please reconnect the network, as it may need some time to recover. Please check the status 2 minutes later.
3. Confirm that the network is stable. Put the phone beside your device and ensure they are in the same network environment. Try to open a website to ensure the network can be used.
4. Confirm if the home WiFi network is normal or if the WiFi name and password has been modified. If necessary, remove the device and add again.

5. If the network is normal but the device is still offline, please check if there are too many WiFi connections. Try restarting the router, wait for 5 minutes, and observe the status of the device.
6. If it still does not work, it is recommended to remove the device or reset the router and then add it again.

6.0 technical specifications

Compatibility	
Compatible systems	• Conventional: single-stage heating, 2-stage heating, and 2-stage cooling HVAC systems • Heat pump: 2-stage heating, 2-stage cooling, 2-aux heating • Humidifier/dehumidifier • Supports natural gas, electric, hot water, steam or gravity, gas fireplaces (24 volts), oil heat sources, heat pump, dual fuel
HVAC Control Functions	
System mode	• Heat, Cool, Auto, Off
Hybrid mode	• Low Cost, Comfort, Green, Nighttime
Fan mode	• On, Auto, Circle (adjustable)
Advanced	• Setting temperature locally or remotely • Auto-changeover between heat and cool mode (System Auto) • Compressor protection time is available for select equipment • Failure protection by cutting off all circuit relays • Smart warm-up • Low temperature protection

technical specifications

EN

Wireless Connectivity	
WiFi	• 802.11 b/g/n @ 2.4GHz
Radio	• 915MHZ
Physical Specifications	
LCD Screen	• 4.3-inch color touch screen
PIR Sensor	• Sensing distance 3m, angle 70°
Electrical Rating	• 24 VAC, 1A carry; 5A surge 50/60 HZ
Max. Load Current	• 1A
Operating Environment	• 0°C~50°C (32°F~122°F) • Humidity range: 5%~95%
Storage Temperature	• 30°C~60°C (-22°F~140°F)
Wiring	• 18 AWG, requires both R and C wires from the HVAC system
Dimensions	• 131mm (L) x 78mm (W) x 29.2mm (H)
Mounting Type	• Wall mounting

technical specifications

Indoor and Outdoor Sensors	
Battery	• DC 3V (2*AAA batteries)
Radio	• 915MHZ
LED	• 2-color LED (red, green)
PIR	• Detect occupancy • Sensing distance 5m, angle 120°
Operating Environment	• 0°C~50°C (32°F~122°F) (indoor only) • Humidity range: 5%~95%
Dimensions	• 62mm (L) x 62mm (W) x 15.5mm (H)
Mounting Type	• Wall-mounted or placed on a stable surface (i.e., a tabletop stand)
Connectivity Range	10m

How Does It Work?

- Access your appliance remotely by downloading the **Home App** from your app store.
- In order to access the app, you will be required to create an account by following the instructions listed within the app (see below for details).
- By pairing your appliance to the **Home App** via WiFi, you gain control to all modes and functions of the appliance.
- All notifications and alarms are sent through the app to keep you connected with ease.

Let's Get Started

1

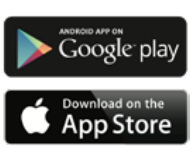

Download the **Home App** from your app store (Google Play or Apple App Store). **Note:** This requires Android 7.0 or iOS 11.0.

2

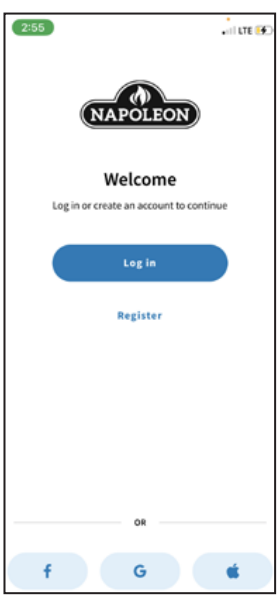

Register an account with the **Home App** OR sign-in using your Facebook, Google, or Apple account information.

home app

3

Enter user information and create a password for the account. Select the country in which the appliance is located.

4

The information entered in Step 3 will be registered to the **Home App** and a confirmation will be sent to the email provided.

5

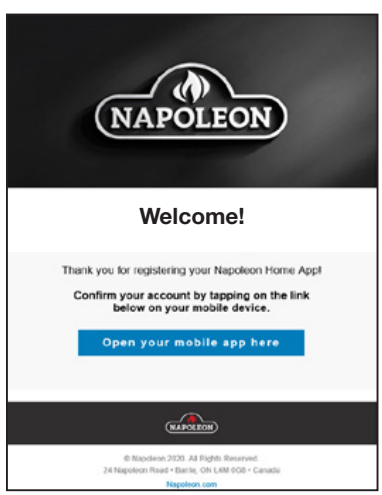

Open email inbox and select the confirmation link.
<u>Note:</u> The confirmation link must be opened on the device that the **Home App** is installed on.

6

If no email is found, click “Re-Send Confirmation Link” and check junk folder.

Adding a Device

7

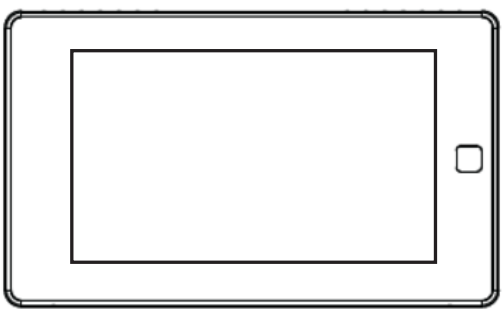

Ensure your appliance is plugged in and turned on.

8

Select “Add Device” and accept the permissions.

9

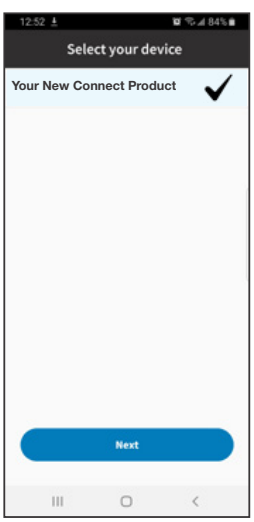

Search for devices and select the device from the list.

10

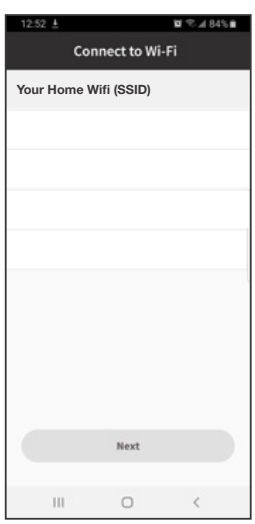

Select your desired WiFi and connect by entering the WiFi password of your home.

home app

11

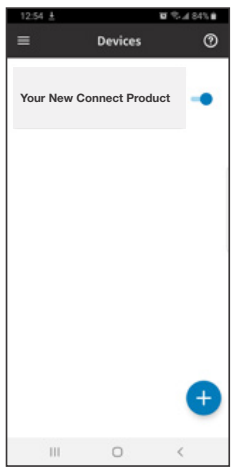

Once the appliance has been connected to the access point, it can be given a nickname for recognizability.

12

You are now connected!

8.0 meet your thermostat

8.1 device overview

Main Page

- THU 12:00 Date & Time
- Low Sensor Battery Icon
- -1° Outdoor Temperature
- Humidity Status Indicator & Control Access
- 42% Indoor Humidity (only when viewing temperature controls)
- WiFi
- Increase Temperature
- Heat to 26.0 Set Point Temperature
- Decrease Temperature
- System Mode
- Menu
- Hold until 14:00 Hold Mode
- Fan Mode
- 27.5 Indoor Temperature
- Weather Icon

meet your thermostat

System Mode

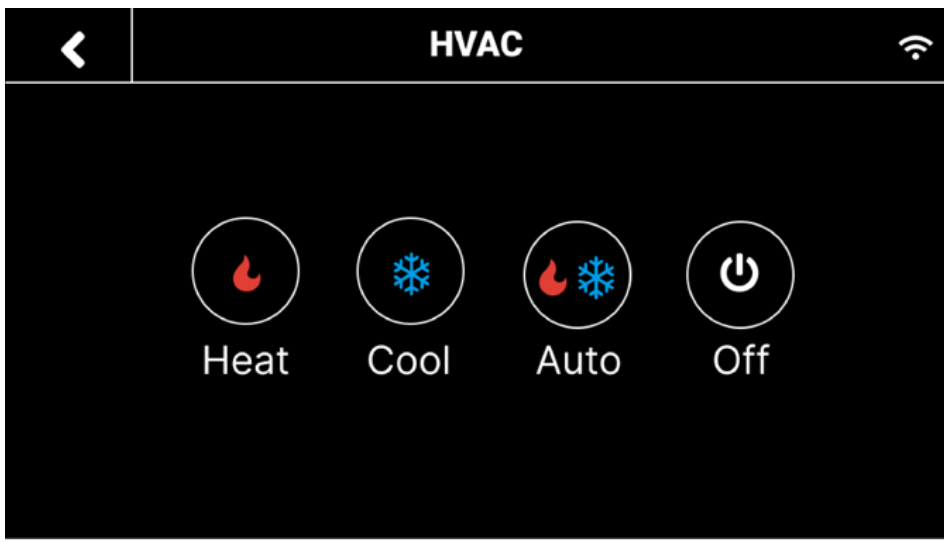

Heat: Heating only

Cool: Cooling only

Auto: Automatic control of heating and cooling based on ambient temperature

Off: Turn the system off

Weather

Click the weather icon to display the real time outdoor weather condition and temperature for the current day in your home location.

Fan Mode

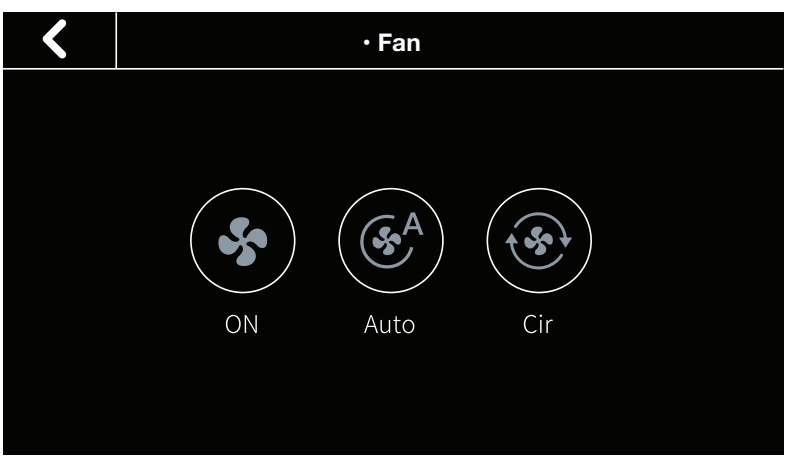

On: Runs continuously

Auto: Automatically adjust fan according to the system mode

Clr: Runs at intervals to circulate air

meet your thermostat

Humidifier/Dehumidifier

Humidity indicator & temperature control access

- + for humidifying
- - for dehumidifying
- Tap icon to switch between humidity and temperature views

42% **Outdoor humidity (only when viewing humidity controls)**

Increase humidity level if humidifier is connected

Set Level 58 % **Humidity level**

Decrease humidity level if dehumidifier is connected

58% **Indoor humidity**

Heating Options

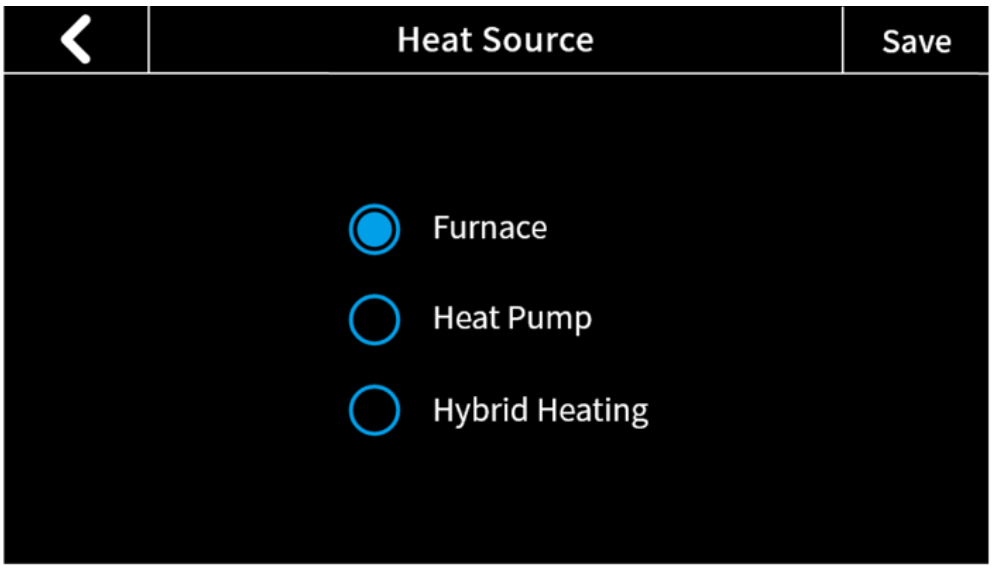

Heat Source

- **Furnace**

- **Heat Pump**
  Note: The below settings are only applicable when the heat source selected is Heat Pump:
  - Min. Heat Pump Outdoor Temperature: When the outdoor temperature is below this temperature, the Heat Pump will not be used.
  - Max. Heat Pump Run Time: This is the length of time the Heat Pump is allowed to run.

- **Hybrid**

Choose your preferred source of heating from the options in Heat Source. The thermostat will satisfy demand based on selections made. The Hybrid selection will enable the use of dual fuel switching, alternating between primary and secondary heat sources.

meet your thermostat

Hybrid Mode

When Hybrid heating is selected in **Menu** > **System** > **Heating Options** > **Heat Source**, the heat source used by the system is controlled by the values in the corresponding modes' switching table. The switching tables can be accessed in **Menu** > **Hybrid Heating.**

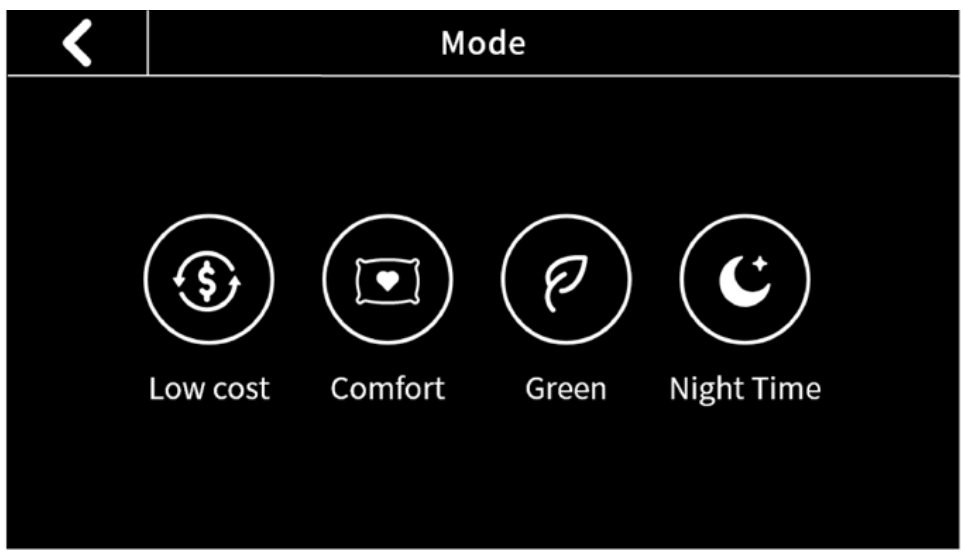

Low Cost: Satisfy your heating demands using the lowest cost available fuel source. In this mode, the second stage HP heating is will be turned on according to the 'Compressor Stage2 Temp Delta' (non adjustable) and 'Compressor Stage1 Max Runtime' (adjustable) and second stage furnace heating will be turned on according to 'Aux Heat Stage 1 Max Runtime' (adjustable) and 'AUX Heat Stage 2 Temp Delta' (non adjustable) in **Menu** > **Settings** > **Installation** > **Advanced setting**.

Comfort: Satisfy your heating demands with any available fuel source to prioritize your comfort levels, always keeping your home as close to your desired set point as possible. In this mode, the second stage HP heating is will be turned

on according to the ‘Compressor Stage2 Temp Delta’ (non adjustable) and ‘Compressor Stage1 Max Runtime’ (adjustable) and second stage furnace heating will be turned on according to ‘Aux Heat Stage 1 Max Runtime’ in **Menu** > **Settings** > **Installation** > **Advanced setting**.

Green: The values in your green switching table are formulated to help in prioritizing GHG savings and reducing your carbon footprint when satisfying your heating demand. In this mode, the second stage HP heating is will be turned on according to the ‘Compressor Stage2 Temp Delta’ (non adjustable) and ‘Compressor Stage1 Max Runtime’ (adjustable) and second stage furnace heating will be turned on according to ‘Aux Heat Stage 1 Max Runtime’ (adjustable) and ‘AUX Heat Stage 2 Temp Delta’ (non adjustable) in **Menu** > **Settings** > **Installation** > **Advanced setting**.

Nighttime: Run quiet operation of your unit at night, limiting fan speed and utilizing low stage heating for as long as possible. In this mode, second stage HP heating is controlled by values in ‘Compressor Stage2 Temp Delta’ and ‘Hybrid Max Heat Pump Runtime’ and second stage furnace heating will be turned on according to the ‘Aux Heat Stage 1 Max Runtime’ and ‘AUX Heat Stage 2 Temp Delta’ in **Menu** > **Settings** > **Installation** > **Advanced setting**.

meet your thermostat

Hold Mode

There are 3 hold modes you can select:

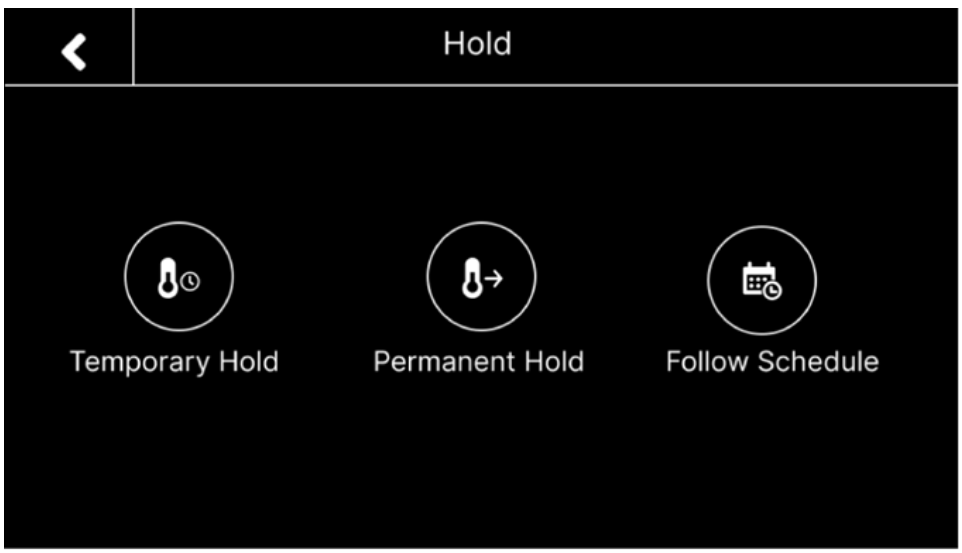

Follow Schedule: Follow the settings of schedule to adjust the temperature, fan, or hybrid mode (if enabled). When you remove hold, the mode will turn to **“Follow Schedule”**.

Permanent Hold: This will always hold the current target temperature, fan, or hybrid mode (if enabled). It will override the current schedule settings.

Temporary Hold: Keep the current target temperature, fan, or hybrid mode (if enabled) until the next scheduled activity begins. You can select this mode manually or by adjusting the target temperature, fan, or hybrid mode (if enabled) under **“Follow Schedule”** mode, as it will turn to **“Temporary Hold”**.

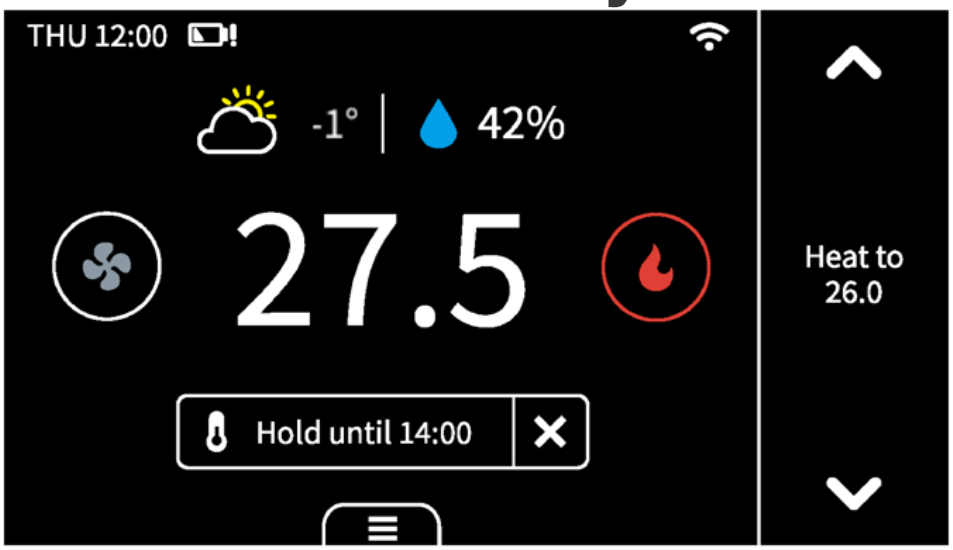

Hold temperature until next schedule.

Vacation Mode

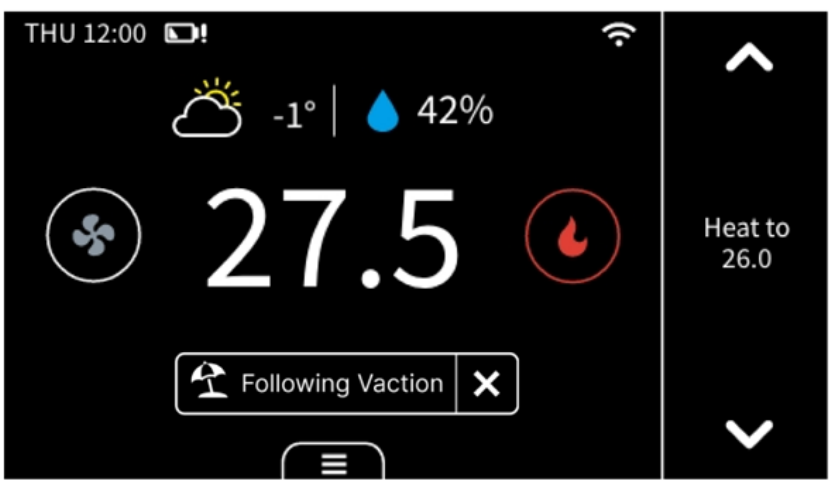

If you are away for a long time, you can set the thermostat to vacation mode in **“Menu”** -> **“Vacation”**. You can set the time of departure and return, as well as the highest and lowest temperatures during this period. The thermostat will automatically hold this temperature range.

NOTE: During this mode, you cannot manually change the target temperature. If you want to exit this mode, change the Hold mode manually or delete the vacation in menu.

meet your thermostat

Display

Here are some changes on the screen and what they mean:

1

2

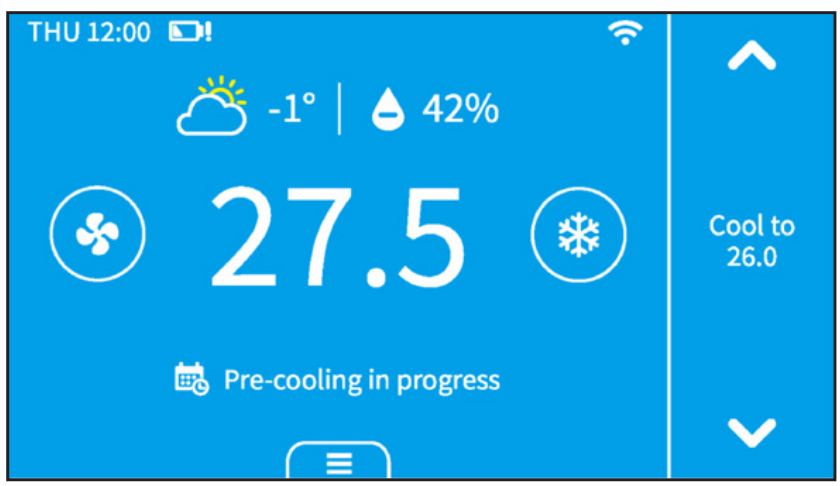

When you turn on the compressor frequently, there will be a time countdown to protect the compressor. This will occur in the following case:

Heat pump: heating, cooling || Conventional: cooling

You can set the time countdown in **“Menu”** -> **“Installation”** -> **“Advanced”** -> **“Compressor Protect Time”**.

3 When the outdoor temperature is below the **“Compressor Min Outdoor Temp”** you set, the icon on system mode will display **!** and the compressor will be turned off automatically.

The thermostat is connected to the router, but the router is not connected to the network.

Unusual heating or cooling alert:

When the following occurs, this prompt appears on the thermostat:

1. When your thermostat is cooling, the temperature in the room does not go down for a long time, but instead, the temperature still rises.
2. When your thermostat is heating, the temperature in the room does not go up for a long time, but instead, the temperature still falls.

meet your thermostat

Menu

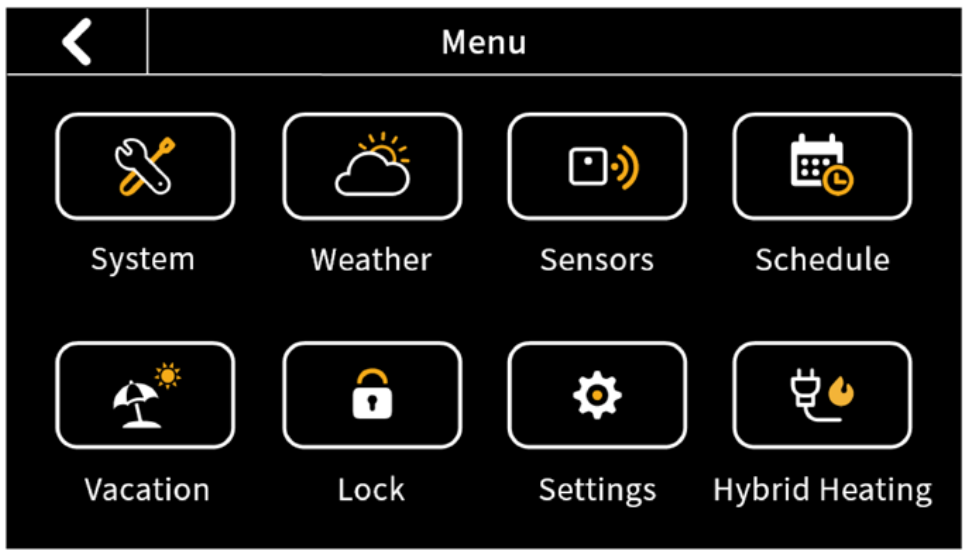

System

- HVAC: Switch system mode (Heat/Cool/Auto/Off)
- Fan: Switch fan mode (ON/Auto/Cir)

Weather

Weather conditions of the real time in your home location.

Sensors

Add multi-sensors to balance the current temperature throughout the home.

Schedule

Set schedule to change the temperature automatically.

Vacation

Set vacation to change the temperature automatically.

Lock

Multi-level keypad lockout to avoid others tampering with the settings. After locking, the corresponding function is not available and the corresponding settings icon will go dim. An icon with a small lock will appear on top of the main page.

Settings

- Date & Time: Set time format.
- Fan Run Time: Set minimum fan run time in **“Clr”** mode during heating/cooling cycles.
- WiFi: Configure and display WiFi information.
- Smart Warm-Up: When smart warm-up is enabled, your thermostat automatically calculates when to turn on heating or cooling so your home will reach a scheduled temperature on time. This only worked in **“Follow Schedule”** mode.
- Device Name: Rename your device.
- Temp Unit: Celsius or Fahrenheit.
- Temp Range: Set the adjustment range of heating and cooling.
- Screen: Adjust screen brightness on active/standby/ sleep and standby time.
- T/H Correction: Adjust the accuracy of temperature and humidity to match your environment.
- Installation

meet your thermostat

Advanced Settings

1. Heat/Cool Dissipation Time

This is the amount of time the fan will continue to run once the heat/cool is turned off. It will circulate any heated/cooled air remaining in the vents.

2. Compressor Protect Time

A timed countdown to protect the compressor from starting too frequently.

3. Compressor/Aux Heat Min On Time

This is the length of time the compressor or auxiliary heat is turned on during heating/cooling cycles.

4. Aux Heat Stage 2 Temperature Delta

When the difference between the indoor temperature and the target temperature reaches this value, the second stage is automatically turned on.

5. Aux Heat Stage 1 Max Routine

If the first stage fails to reach the target temperature after this time, the second stage will be automatically turned on.

6. Hybrid Max Heat Pump Run Time

This is the length of time the Heat Pump is allowed to run in hybrid heating mode.

7. Differential Temperature/Humidity

This is the allowable value from your set point before your heating, cooling, or humidity call is made.

Hybrid Heating
Set mode to low-cost, comfort, green, or night (see “Hybrid Mode” section for more details).

Equipment
Reconfigure your wiring setting on thermostat.

Equipment Test
Test whether the corresponding function of the equipment can run normally as required.

- Filter: Filter change reminder.
- Reset:
  Reset setting
  Reset schedule (Reset system schedule and clear vacation.)
  Reset all (Reset the thermostat to default factory setting.)
- About: Show device information.

9.0 app overview

Control Page

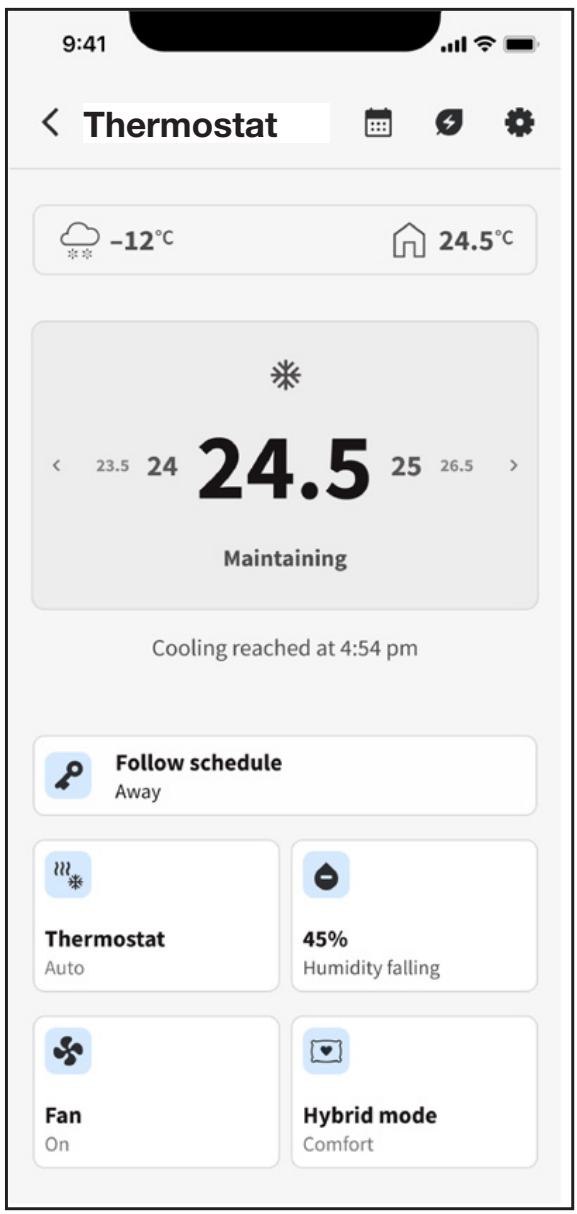

Thermostat Mode: Displays the current system mode. Tap to switch.

Fan Mode: Displays the current fan mode. Tap to switch.

Hold Mode: Displays the current hold mode. Tap to switch.

Schedule: Set a schedule for the week so that you can get the right temperature at a certain time.

Humidity Control: Displays the current humidity level. Tap to adjust target level.

Set Point Temperature: Increase/decrease the target temperature.

Heating Mode: Displays heating source selection. When hybrid heating is selected, options to select hybrid modes will be displayed.

Settings: You can edit the app settings, such as device name, heat source, temperature unit, and geofencing.

FCC Warning Statement

Changes or modifications not expressly approved by the party responsible for compliance could void the user's authority to operate the equipment. This equipment has been tested and found to comply with the limits for a Class B digital device, pursuant to Part 15 of the FCC Rules. These limits are designed to provide reasonable protection against harmful interference in a residential installation. This equipment generates uses and can radiate radio frequency energy and, if not installed and used in accordance with the instructions, may cause harmful interference to radio communications. However, there is no guarantee that interference will not occur in a particular installation. If this equipment does cause harmful interference to radio or television reception, which can be determined by turning the equipment off and on, the user is encouraged to try to correct the interference by one or more of the following measures:

- Reorient or relocate the receiving antenna.
- Increase the separation between the equipment and receiver.
- Connect the equipment into an outlet on a circuit different from that to which the receiver is connected.
- Consult the dealer or an experienced radio/TV technician for help.

This device complies with part 15 of the FCC Rules. Operation is subject to the following two conditions: (1) This device may not cause harmful interference, and (2) this device must accept any interference received, including interference that may cause undesired operation.

RF Exposure Statement

To maintain compliance with FCC's RF Exposure guidelines, This equipment should be installed and operated with minimum distance of 20cm the radiator your body. This device and its antenna(s) must not be co-located or operation in conjunction with any other antenna or transmitter.

IC warning:

This device contains licence-exempt tasmittre(s)/receiver(s)/ that comply with Innovation Science and Economic Development Canada's licence-exempt RSS(s). Operation is subject to the following two conditions:

1) this device may not cause interference and

2) this device must accept any interference, including interference that may cause undesired operation of the device. Radiation Exposure: This equipment complies with Canada radiation exposure limits set forth for an uncontrolled environment; To maintain compliance with IC's RF Exposure guidelincs, This cquipment should be. installed and operated with minimum distance of 20cm the radiator your body. This device and its antenna(s) must not be co-located or operation in conjunction with any other antenna or transmitter.

Déclaration de l'ISED Canada :

Cet appareil contient des tasmittre (s) / récepteur (s) sans licence / conformes à l'innovationRSS exemptes de licence de Sciences et Développement économique Canada. L'opération est sous réserve des deux conditions suivantes :

1) cet appareil ne peut pas causer d'interférences et

2) ce dispositif doit accepter toute interférence, y compris peut provoquer le fonctionnement indésirable de l'appareil. Exposition aux rayonnements : Cet équipement est conforme aux radiations du Canada limites d'exposition pour un environnement incontrôlé noncé d'exposition RF Pour maintenir le respect des guides d'exposition RF d'IC, cquipment doit être.installé et actionné avec une distance minimale de 20cm le radiateur de votre corps. Cet appareil et ses antennes ne doivent pas être co-localisé ou en opération en conjonction avec toute autre antenne ou émetteur.