Boulevard 48-inch Direct-Vent Fireplace
DVLL48BP

INCLUDES

- Multi-Function Remote
- Ceramic Glass
- Matte Black Liner
- Barrier Screen
- Noncombustible Board for top/sides

REQUIRES

- Decorative Crushed Glass (5 boxes)

ACTUAL DIMENSIONS

69” W x 34 5/16” H x 18 5/8” D

GLASS VIEWING AREA

48” W x 13” H

TECHNICAL INFORMATION

- Maximum heat output:
  34,000 BTU (Propane), 38,000 BTU (Nat)
- Efficiency Rating:
  – 69.30% P4 (Nat)
- Weight: 377 lbs.
- Clearances:
  – Side Wall: 8”
  – Top Stand-Off Bracket: 0”
  – Top Framing Edge: 16”
- Type of Gas: Propane or Natural
- Iron Pipe Size: 1/2-inch
- Ignition Systems: Multi-Function

FIELD INSTALLED ACCESSORIES

- Logs: 6-piece log set, Rocks, 5 SS Coils
- Liners: Black Porcelain, Bronze Ridgeback
- Decorative Fronts:
  Forged Iron - Covers fireplace face
  Front - 3/4-inch conceals tile edges at the fireplace opening
- Decorative Media: Crushed Glass

DVLL48BP

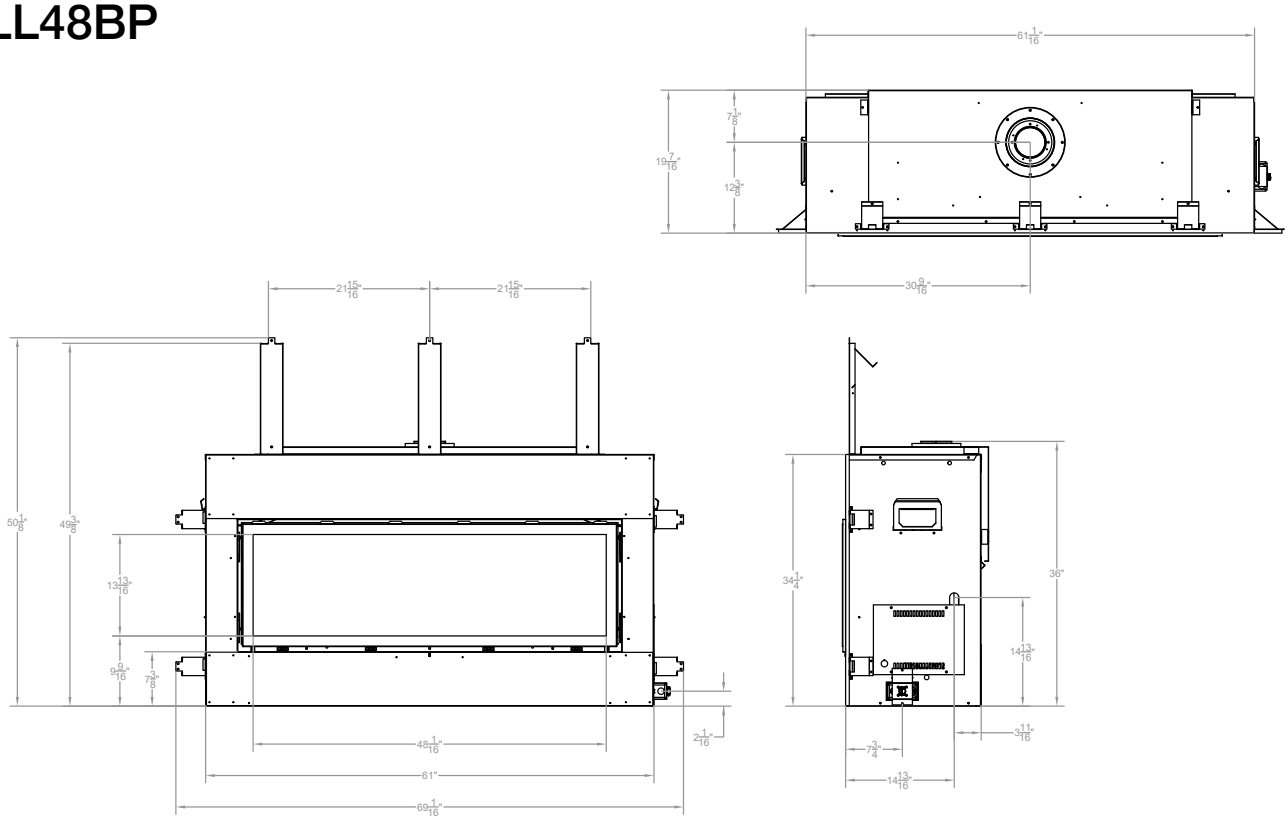

Clearance to Combustibles (in inches)	
Back	See Diagram Below
Side	3
Floor	0
Top Stand-off	0
Top Framing Edge	16

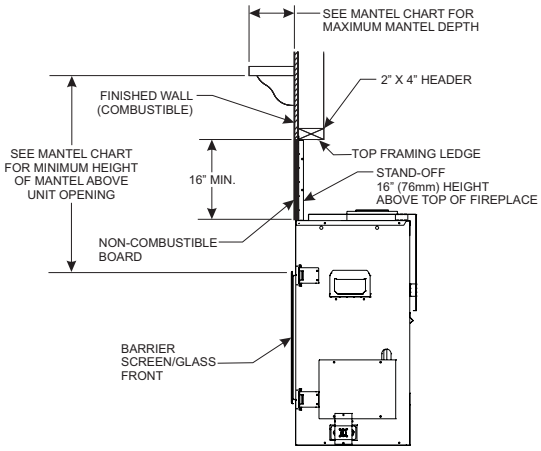

Framing Dimensions (in inches)	
Height (A)	49 1/2
Width (B)	67 5/8
Depth (C)	21 1/2

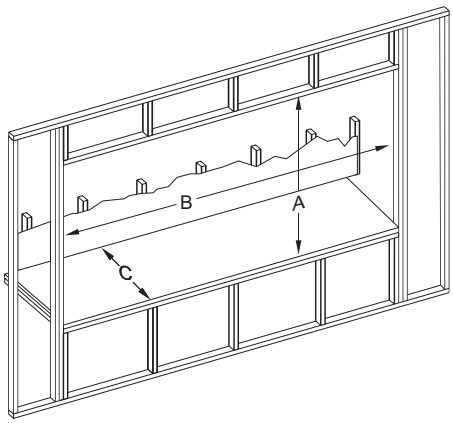

Empire is committed to continuous product improvement; specifications are subject to change without notice. Dimensions in this brochure are approximate; read and follow the framing dimensions in the owners manual supplied with your Empire product. Flame size, shape, and color will vary from photos. Our mantels feature natural veneers and hand-rubbed finishes – wood grain and color will vary. Adjust light levels and use "natural light" incandescent bulbs to enhance the dramatic look for your wooden mantel.

Member of the following industry associations:

This appliance is design-certified to the ANSI standard by:

Empire Comfort Systems Inc.
918 Freeburg Ave.
Belleville, IL 62220-2623
info@empirecomfort.com

09/19

The Empire Comfort Systems and White Mountain Hearth names and logos are registered U.S. trademarks.