Boulevard
DIRECT-VENT LINEAR FIREPLACES

# INSTALLATION INSTRUCTIONS

## LSM1THF-1
## LOGS AND ROCKS SET

### INSTALLER:
**Leave this manual with the appliance.**

### CONSUMER:
**Retain this manual for future reference.**

**⚠ WARNING**

**FIRE OR EXPLOSION HAZARD**
**If the information in this manual is not followed exactly, a fire or explosion may result causing property damage, personal injury or loss of life.**

- **Do not store or use gasoline or other flammable vapors and liquids in the vicinity of this or any other appliance.**
- **WHAT TO DO IF YOU SMELL GAS**
  - **Do not try to light any appliance.**
  - **Do not touch any electrical switch; do not use any phone in your building.**
  - **Leave the building immediately.**
  - **Immediately call your gas supplier from a neighbor's phone. Follow the gas supplier's instructions.**
  - **If you cannot reach your gas supplier, call the fire department.**
- **Installation and service must be performed by a qualified installer, service agency or the gas supplier.**

## LOG SET FOR USE WITH DIRECT VENT FIREPLACE MODELS:

**DVLL36BP92(N,P)-1**
**DVLL48BP92(N,P)-2**
**DVLL48SP90(N,P)-1**
**DVLL60BP90(N,P)-1**
**DVLL72BP90(N,P)-1**

GAS-FIRED C UL US LISTED

**⚠ WARNING**

**If not installed, operated and maintained in accordance with the manufacturer's instructions, this product could expose you to substances in fuel or from fuel combustion which can cause death or serious illness.**

**This decorative media set includes an unusual assortment of logs and rocks in varying textures and colors to complement your linear fireplace - plus stainless steel coils to add a unique flair.**
**For ease of installation, unpack all pieces and lay out so that any identifying letters are visible.**

NATIONAL FIREPLACE INSTITUTE
NFI
CERTIFIED
www.nficertified.org

We suggest that our gas hearth products be installed and serviced by professionals who are certified in the U.S. by the National Fireplace Institute® (NFI) as NFI Gas Specialists.

# TABLE OF CONTENTS


| SECTION | PAGE |
|---|---|
| Important Installation Guidelines | 3 |
| General Information | 3 |
| Rock Identification | 4 |
| Log Identification | 5 |
| Rock and Log Placement - DVLL36BP Models | 6 |
| Installation Of Locating Pins - DVLL36BP Models | 7 |
| Rock and Log Placement - DVLL36BP Models | 8 - 22 |
| Completing Installation - DVLL36BP Models | 23 |
| Rock and Log Placement - DVLL48BP Models | 24 |
| Installation Of Locating Pins - DVLL48BP Models | 25 |
| Rock and Log Placement - DVLL48BP Models | 26 - 41 |
| Completing Installation - DVLL48BP Models | 42 |
| Log Placement - DVLL60BP Models | 43 - 62 |
| Completing Installation - DVLL60BP Models | 63 |
| Log Placement - DVLL72BP Models | 64 - 83 |
| Completing Installation - DVLL72BP Models | 84 |
| Rock and Log Placement - DVLL48SP Models | 85 - 89 |
| Completing Installation - DVLL48SP Models | 90 |
| Master Parts Distributor List | 91 |
| How To Order Repair Parts | 91 |


# HARDWARE PACK

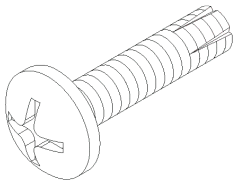

R12061 (QUANTITY 12)
8-32 X 3/4" PH PN
HD SCREW

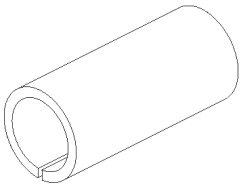

R8234 (QUANTITY 12)
1/4" OD X 9/16"
SPACER

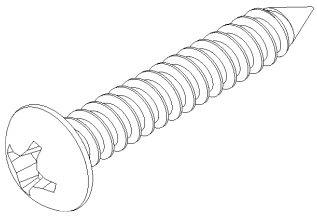

R11329 (QUANTITY 8)
#10 X 1 - 1/2: PH PN
HD SCREW

# IMPORTANT INSTALLATION GUIDELINES

**Proper Log Placement**
Log placement is critical to proper burner performance. Logs must be correctly positioned. The photos in this manual show the proper pinned position for logs and rocks on this set. Owners need to be shown proper log placement and instructed not to move the logs. Logs and rocks must fit firmly onto the locating pins when positioned as shown in the photos. Misformed logs, rocks, or logs with sloppy pin holes must be replaced.

**Proper Placement of Crushed Glass Media**
This fireplace is designed to use crushed glass media on the burner. The maximum amount of crushed glass media varies depending on the fireplace model. The Crushed Glass Quantity and Placement Instructions are located in the "Completing Installation" information at the end of the Log Placement section for each specific fireplace model. Spread out over the entire burner cover, burner screen, and accent light glass panels.
It is recommended that the crushed glass media be added after the log and rock set has been properly installed.

**⚠ CAUTION**

**Do not place crushed glass around the pilot assembly. Crushed glass is only to be placed on/or the burner screen and burner cover. See notice on pages 23, 42, 63, 84, and 90.**

**Make Owners Aware of Proper Log Set Operation**
Properly installed and properly maintained log sets do not deposit soot on the logs. If users see soot appear on a log, call for service. Do not continue to operate the log set.

***NOTICE:*** The hardware, logs, and rocks included in the LSM1THF Log Set provided are for installation in several different fireplace models and sizes.

Some of the hardware, logs, or rocks may not be used on some models and can be discarded after installation is completed.

# GENERAL INFORMATION

**Qualified Installing Agency**
Installation and replacement of gas piping, gas utilization equipment or accessories and repair and servicing of equipment shall be performed only by a qualified agency. The term "qualified agency" means any individual, firm, corporation, or company that either in person or through a representative is engaged in and is responsible for (a) the installation, testing, or replacement of gas piping or (b) the connection, installation, testing, repair, or servicing of equipment; that is experienced in such work; that is familiar with all precautions required, and that has complied with all the requirements of the authority having jurisdiction.

The installation must conform with local codes or, in the absence of local codes, with the *National Fuel Gas Code, ANSI Z223.1/NFPA54*.*

**Available from the American National Standards Institute, Inc. 11 West 42nd St., New York, N.Y. 10018.*

**Commonwealth of Massachusetts:** The installation must be made by a licensed plumber or gas fitter in the Commonwealth of Massachusetts.

Sellers of unvented propane or natural gas-fired supplemental room heaters shall provide to each purchaser a copy of 527 CMR 30 upon sale of the unit.

**Appliance Certification**
This logset is design certified in accordance with American National Standard/CSA Standard ANSI Z21.88/CSA 2.33 and by Underwriters Laboratories for use with a Direct Vent Gas Fireplace Heater and shall be installed according to these instructions.

# ROCK IDENTIFICATION

| PART NUMBER & DESCRIPTION | TOP VIEW | FRONT VIEW |
|---|---|---|
| 35777 ROCK A | | * |
| 35778 ROCK B | | ** |
| 35779 ROCK C | | * |
| 35780 ROCK D | | ** |
| 35781 ROCK E | | * |

* Rocks With Pins in Foam Bun.
** Rocks Without Pins Shipped in Plastic Bags.

| PART NUMBER & DESCRIPTION | TOP VIEW | FRONT VIEW |
|---|---|---|
| 35782 ROCK F | | * |
| 35783 ROCK G | | ** |
| 35784 ROCK H | | * |
| 35785 ROCK I | | ** |
| 35786 ROCK J | | ** |
| 35787 ROCK K | | ** |

# LOG IDENTIFICATION

| PART NUMBER & DESCRIPTION | TOP VIEW | FRONT VIEW |
|---|---|---|
| 35788<br>LOG L | | |
| 35789<br>LOG M | | |
| 35790<br>LOG N | | |
| 35791<br>LOG O | | |
| 35792<br>LOG P | | |
| 35793<br>LOG Q | | |
| 35794<br>LOG R | | |

# ROCK AND LOG PLACEMENT - DVLL36BP MODELS

**Tools Needed:**

- Protective Gloves
- Phillips Screw Driver or Power Drill with Phillips Drive

Before you begin: Do not, handle these logs with your bare hands! Always wear gloves to prevent skin irritation. After handling logs, wash your hands gently with soap and water.

**All Logs**

The positioning of the logs is critical to the safe and clean operation of this heater. Sooting and other problems may result if the logs are not properly and firmly positioned in the appliance. **Refer to Figure 1 for the following warning.**

**⚠ WARNING**

**Failure to position the parts in accordance with this diagram or failure to use only parts specifically approved with this appliance may result in property damage or personal injury.**

**Attention:** Refer to Pages 4 and 5 Parts List and Parts View to order logs or rocks.

**NOTE:** Once the installation is complete with the logs, rocks, and crushed glass media in place, operate the fireplace to verify flame appearance. If there are flames directly impinging a log, turn off fireplace, then remove the crushed glass media directly below where the flame impingement occurred. This should eliminate sooting on the log, and provide a more pleasing flame appearance.

**Installation of the Pins for Log and Rock Placement**

The Log and Rock Hardware kit includes twelve 8-32 x 3/4" long self-threading screws, eight #10 x 1-1/2" long sheet metal screws, and twelve 9/16" long spacers. For this log and rock set, only seven #10 x 1-1/2" long screws and spacers are needed. Install the screws and spacers prior to the log and rock placement.

**NOTE:** The fireplace liner must be installed prior to installing the log and rock spacers so interference with the locator pins is avoided.

Use a power drill with a Phillips drive to install the screws through a spacer at each of the pin locations dimensioned in the burner screen. **See Figures 2 and 3.** These will be the locator pins for the logs and rocks.

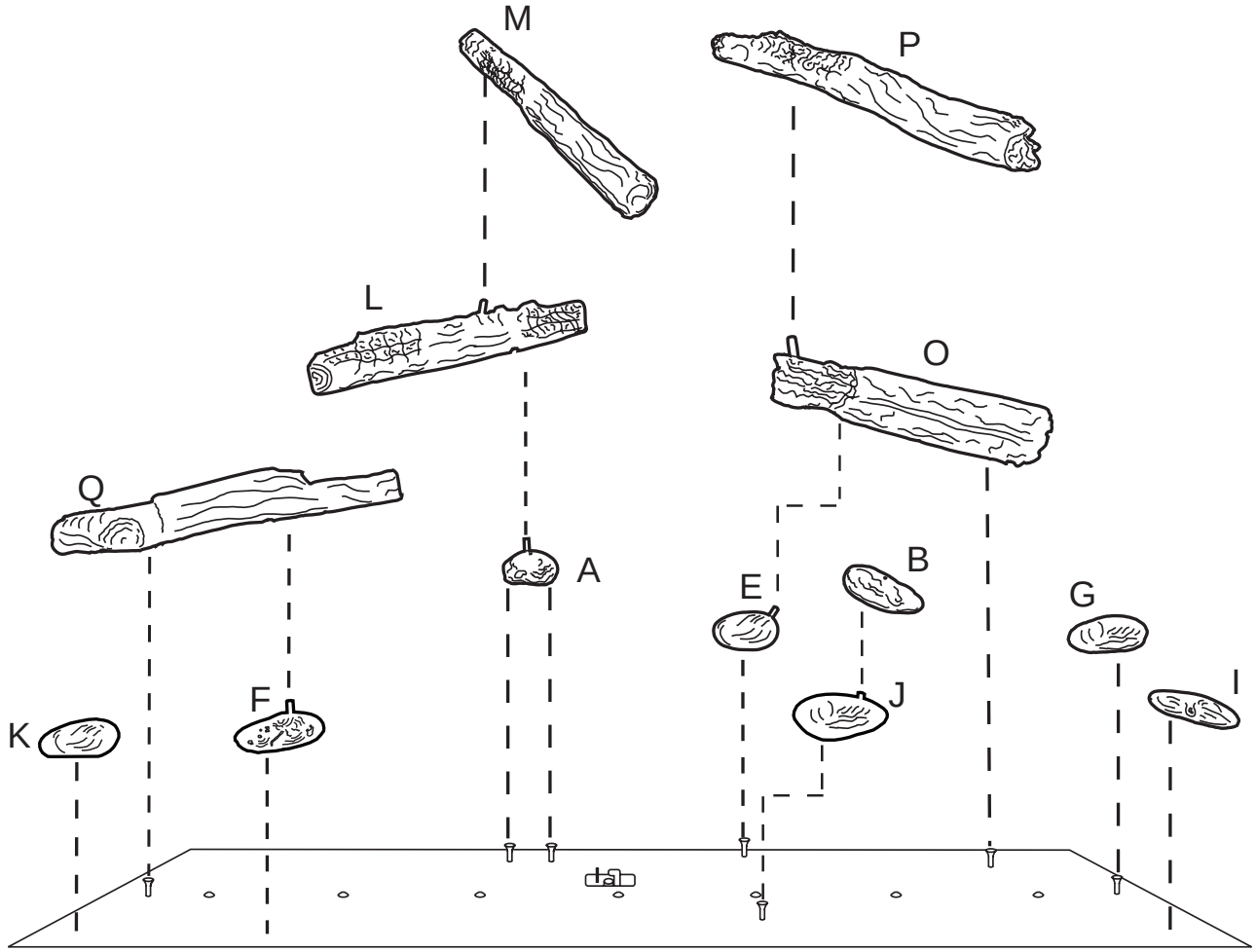


**Rock and Log Placement - Figure 1**

# INSTALLATION OF LOCATING PINS - DVLL36BP MODELS

1. Locate the hardware pack and remove seven # 10 x 1-1/2" long sheet metal screws and seven metal spacers.
2. Using a tape measure and felt tip marker, locate and mark the seven pin locations required as indicated by **Figure 2.**
3. Using a Phillips screwdriver, install the seven screws and spacers. Do not overtighten.

**NOTE:** When installing the Logs and Rocks onto the screws and spacers, some holes in the Logs and Rocks may be slightly undersized, therefore, it may be necessary to gently work the logs and/or rocks onto the pins to obtain a proper fit.

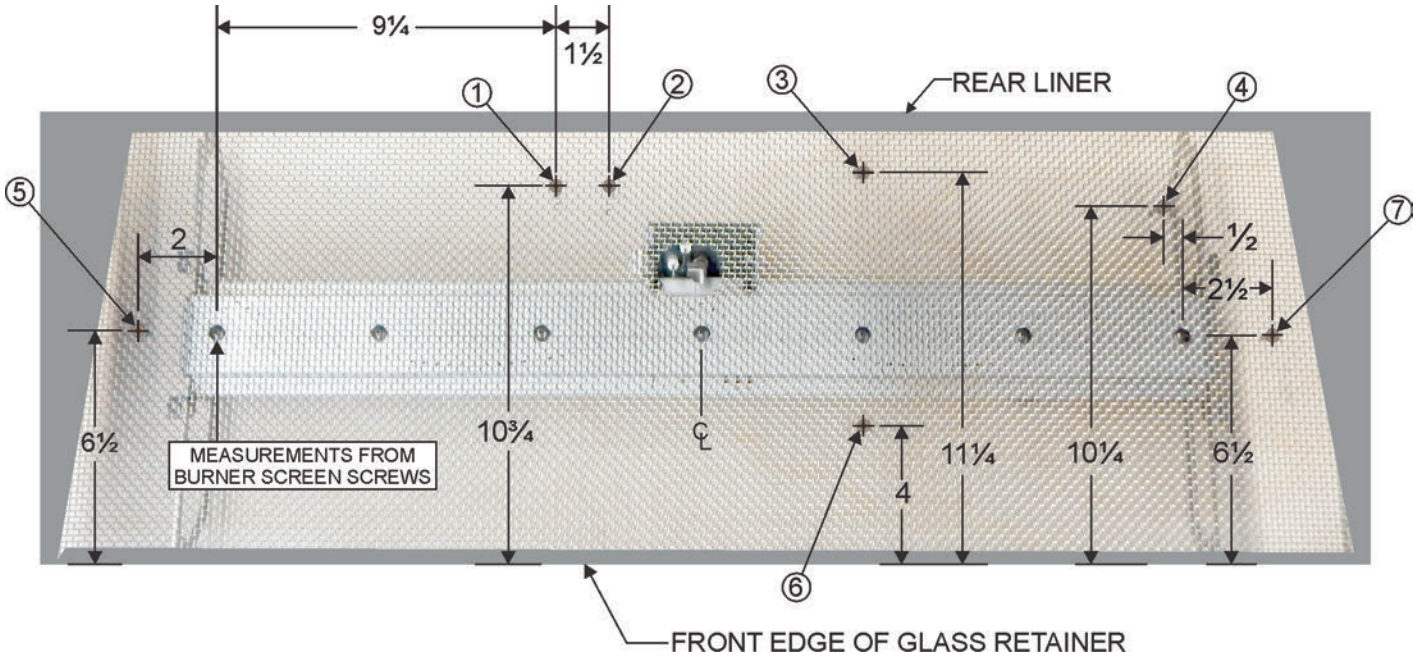


**Locating Pin Location Measurements - Figure 2**

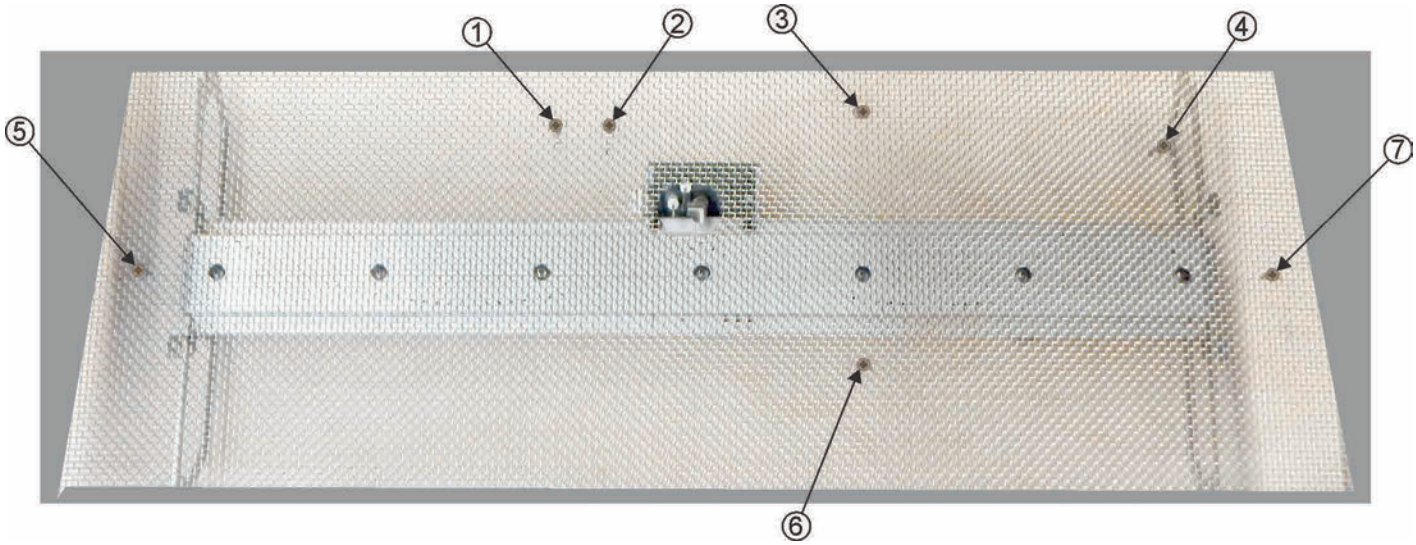


**Pin Locations (1 through 7) - Figure 3**

# ROCK AND LOG PLACEMENT - DVLL36BP MODELS

4. Locate **Rock "A"** and install onto pin 1 and pin 2.
   *For pin locations refer to page 7,* ***Figure 3.***

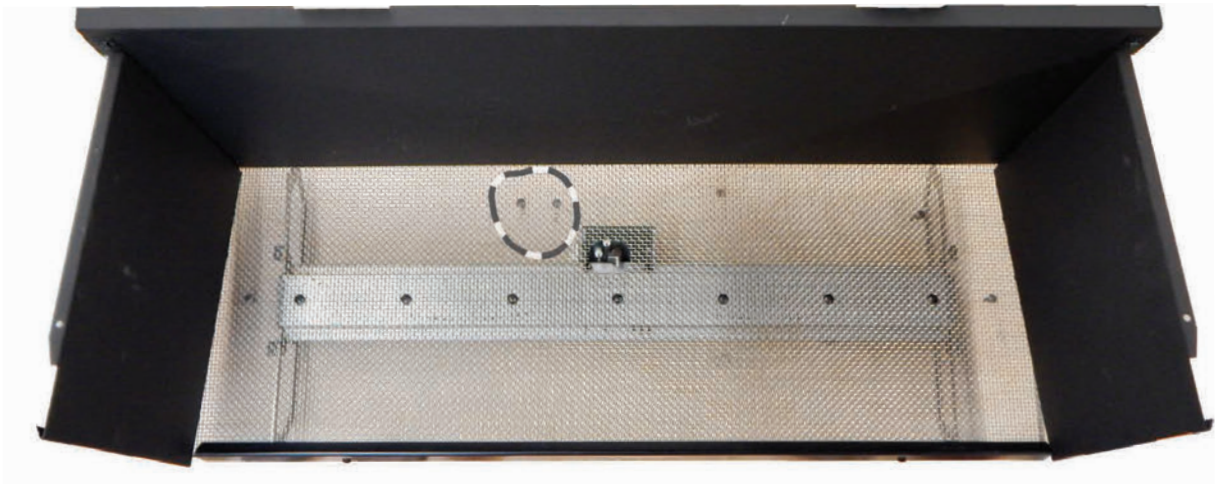

**TOP**

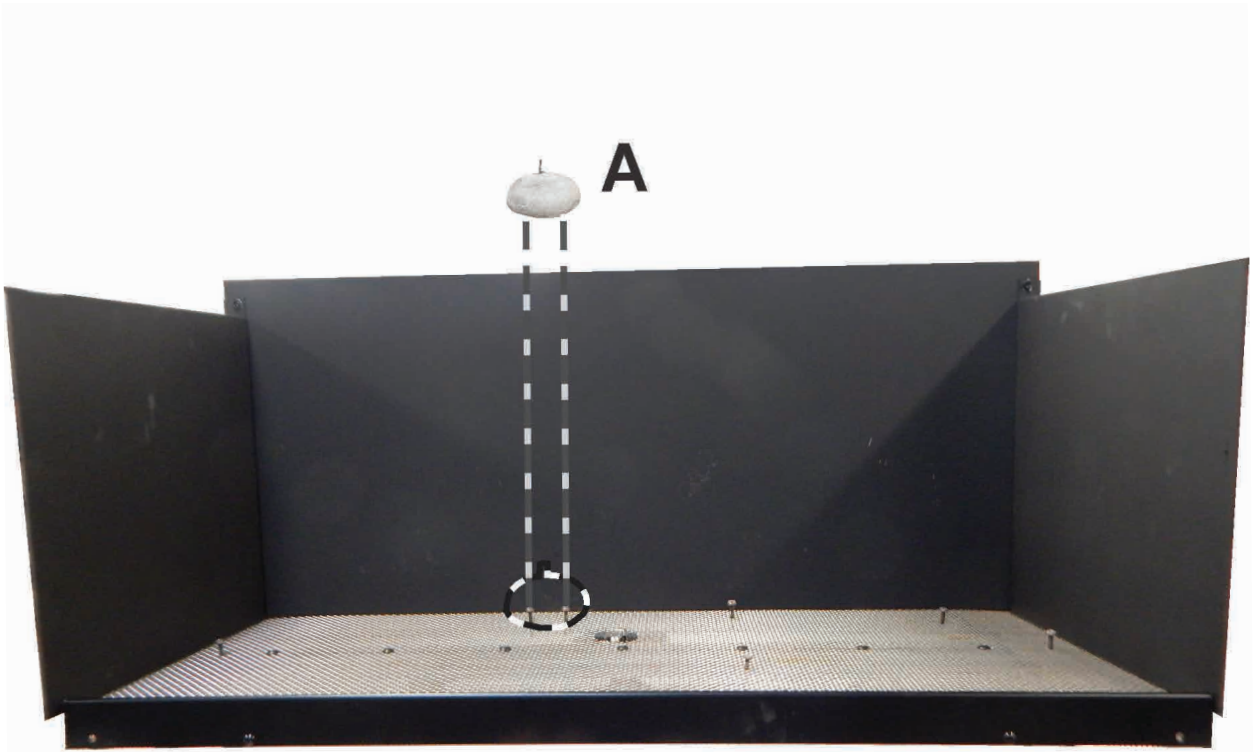


**FRONT**

# ROCK AND LOG PLACEMENT - DVLL36BP MODELS

5. Locate **Rock "E"** and install onto pin # 3.
   *For pin locations refer to page 7,* ***Figure 3.***

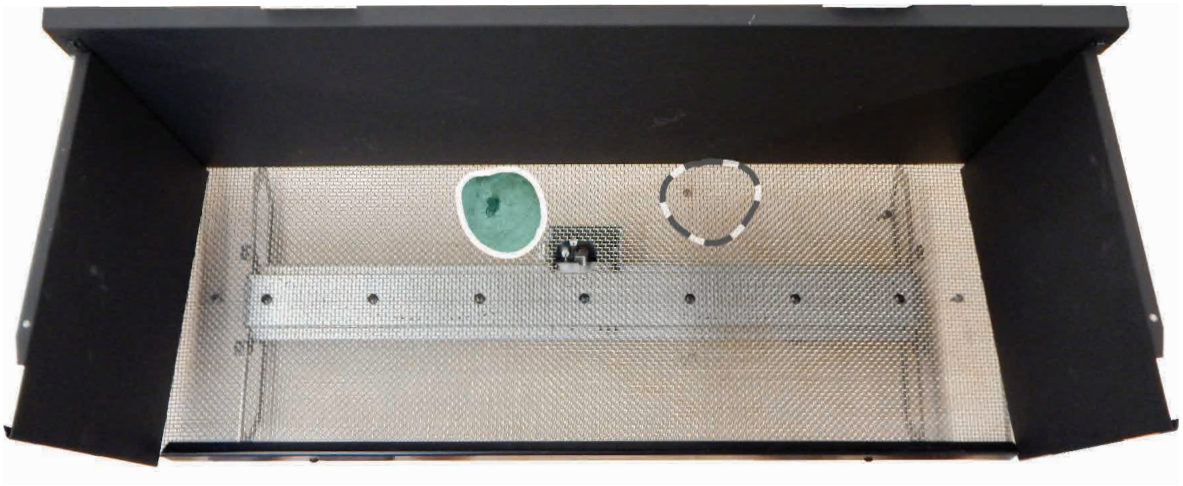

**TOP**

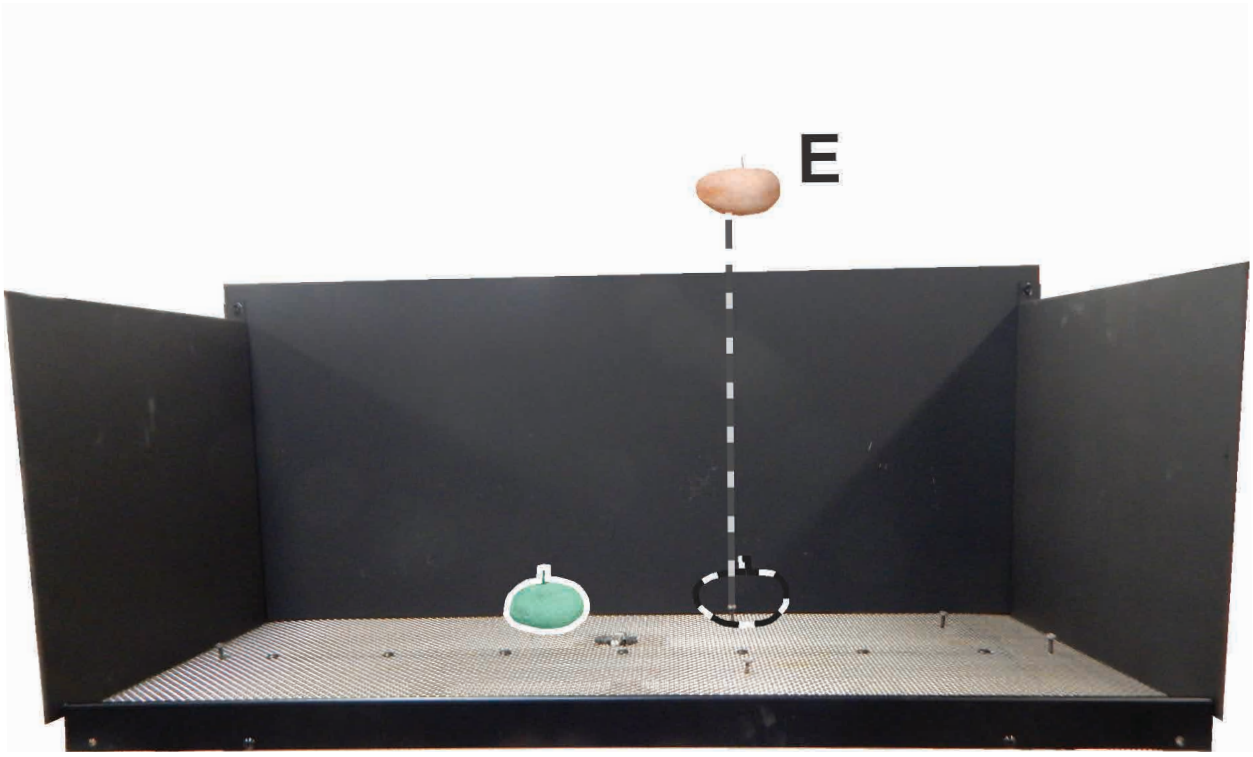


**FRONT**

# ROCK AND LOG PLACEMENT - DVLL36BP MODELS

6. Locate **Rock "K"** and place it on the burner screen near the front left corner of the fireplace.

**TOP**

**FRONT**

# ROCK AND LOG PLACEMENT - DVLL36BP MODELS

7. Locate **Rock "G"** and install onto pin # 7.
   *For pin locations refer to page 7,* ***Figure 3.***

**TOP**

**FRONT**

# ROCK AND LOG PLACEMENT - DVLL36BP MODELS

8. Locate **Rock "F"** and place it on the burner screen approximately 7"-8" from the front left corner of the fireplace. It should be placed just behind the front glass retainer.

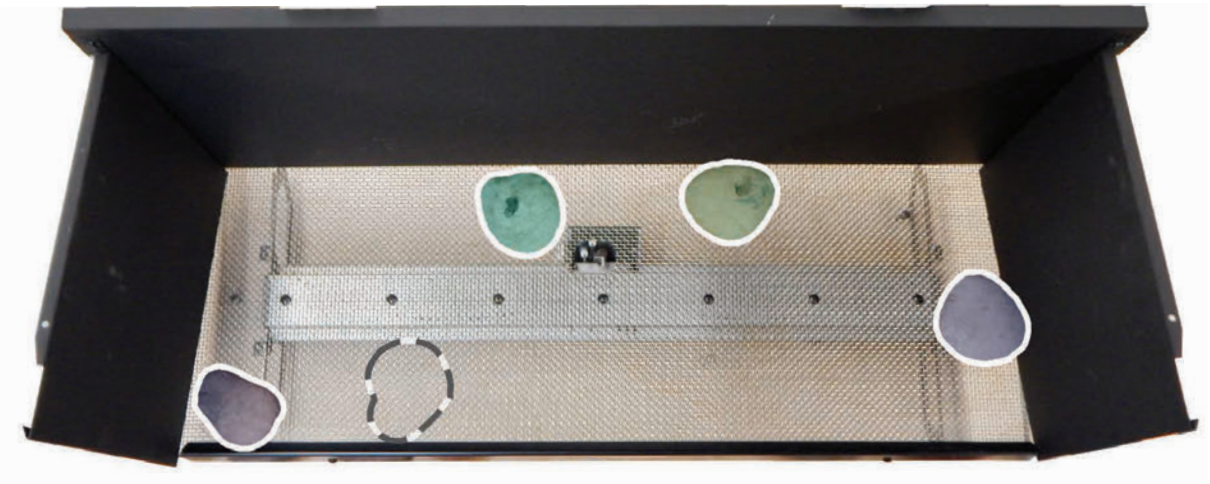

**TOP**

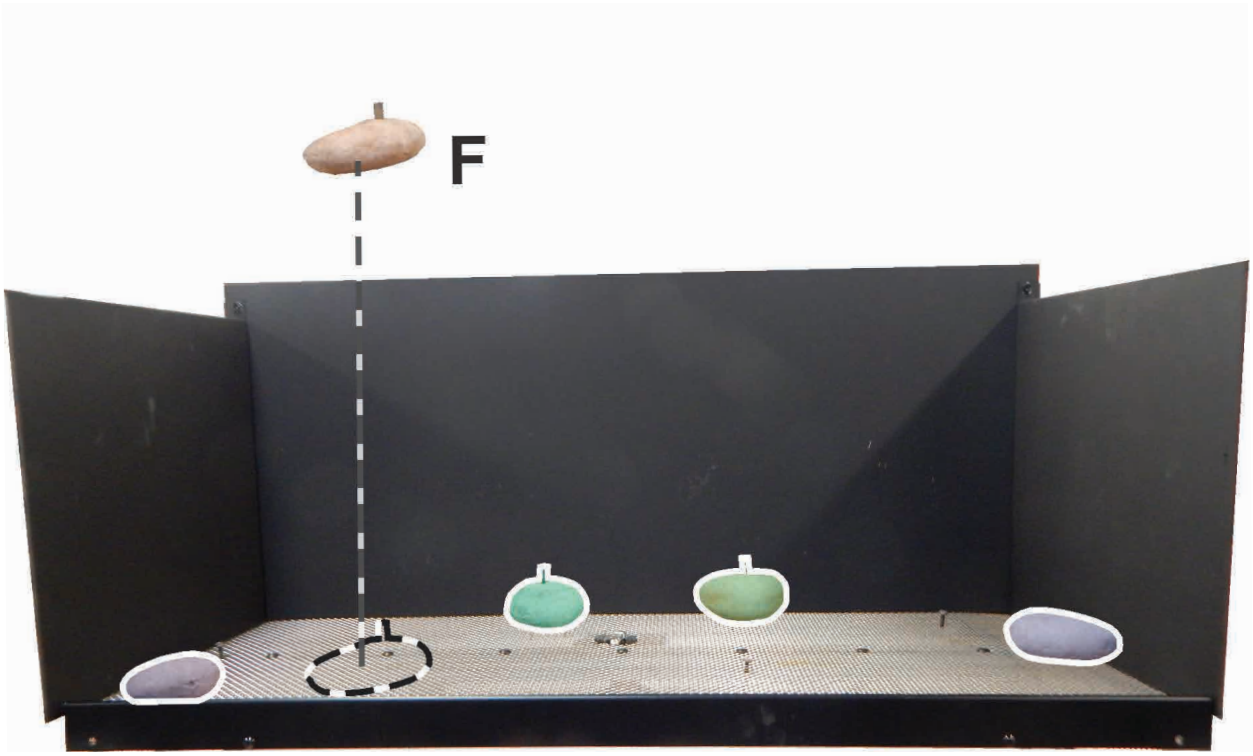


**FRONT**

# ROCK AND LOG PLACEMENT - DVLL36BP MODELS

9. Locate **Rock "J"** and install onto pin # 6.
   *For pin locations refer to page 7,* ***Figure 3.***

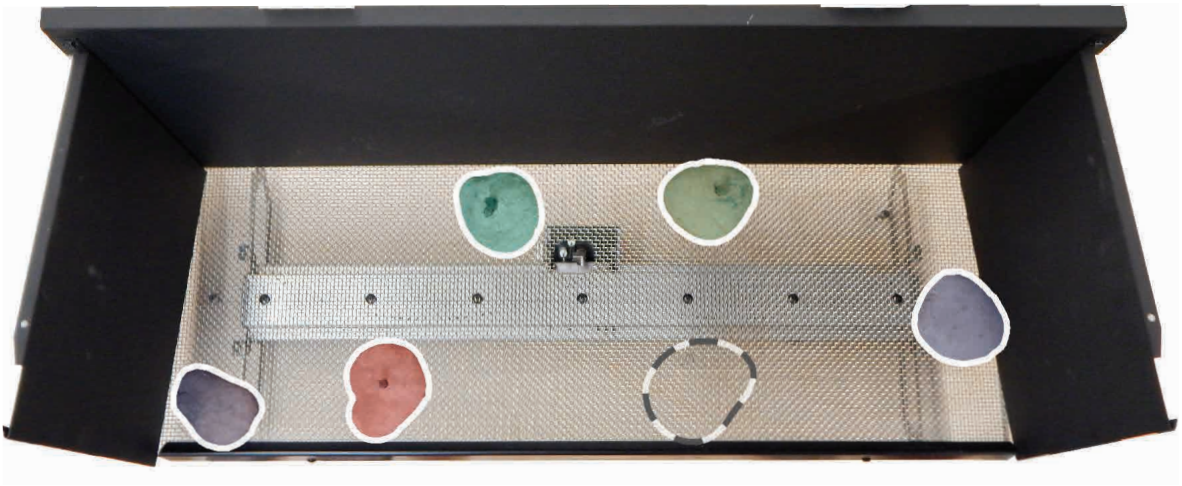

**TOP**

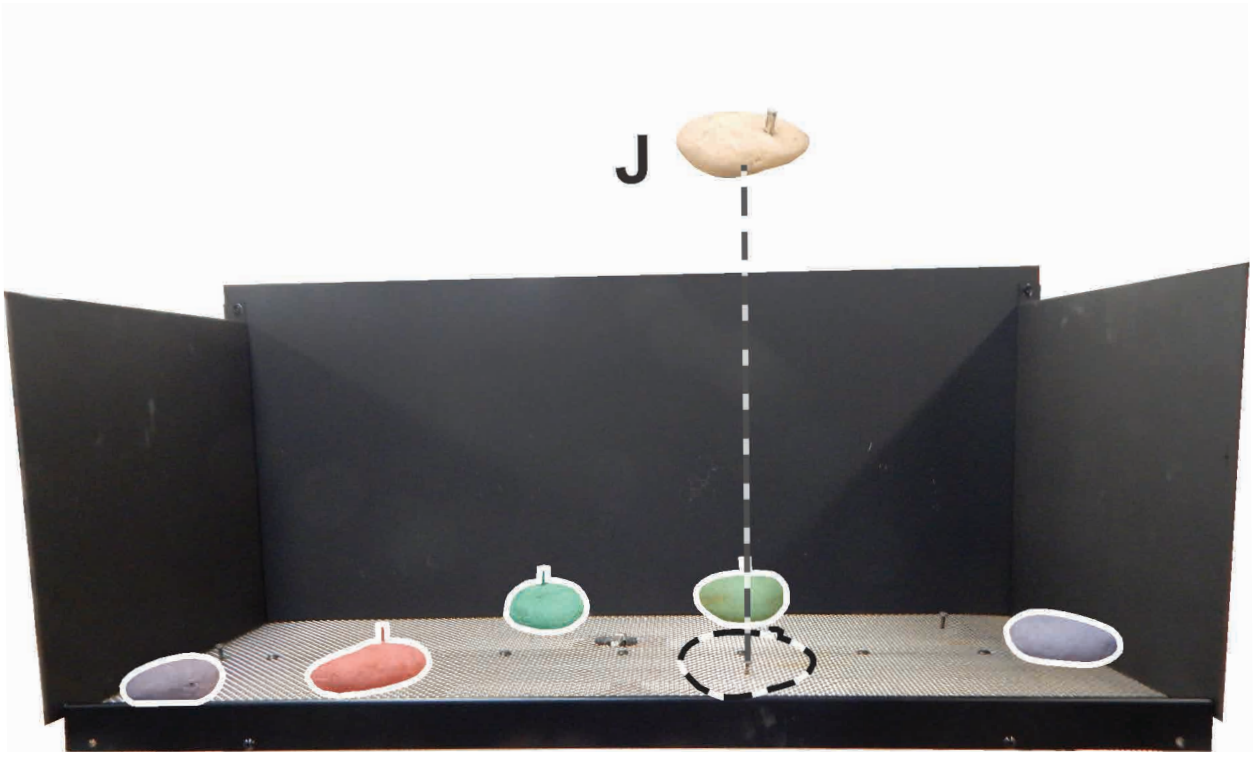


**FRONT**

# ROCK AND LOG PLACEMENT - DVLL36BP MODELS

10. Locate **Rock "I"** and place it on the burner screen at the front right corner of the fireplace. It should be placed just behind the front glass retainer.

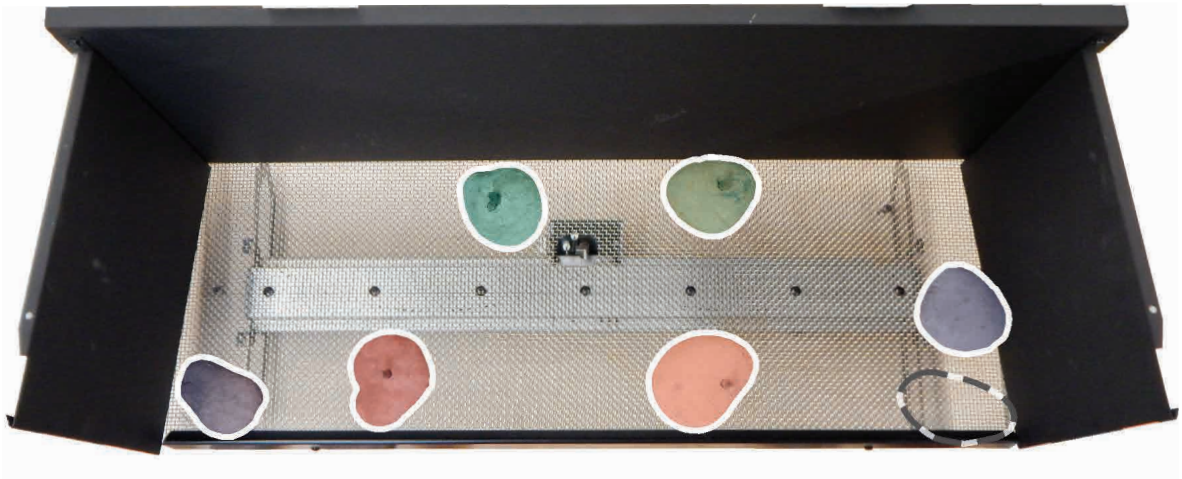

**TOP**

**FRONT**

# ROCK AND LOG PLACEMENT - DVLL36BP MODELS

11. Locate **Log "L"** and install to the back left corner. Interlock the hole in the bottom of the log with the pin on top of **Rock "A".**

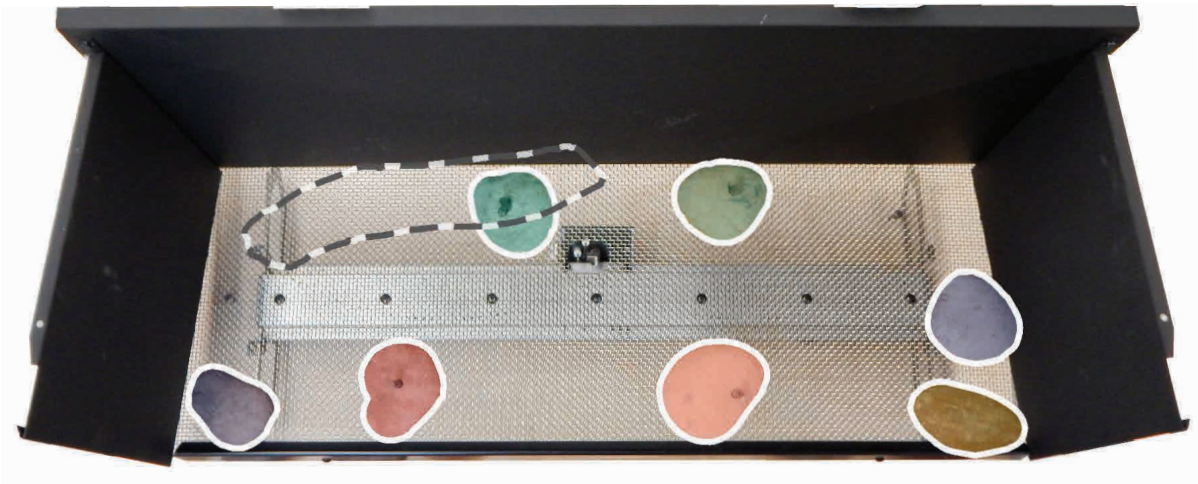

**TOP**

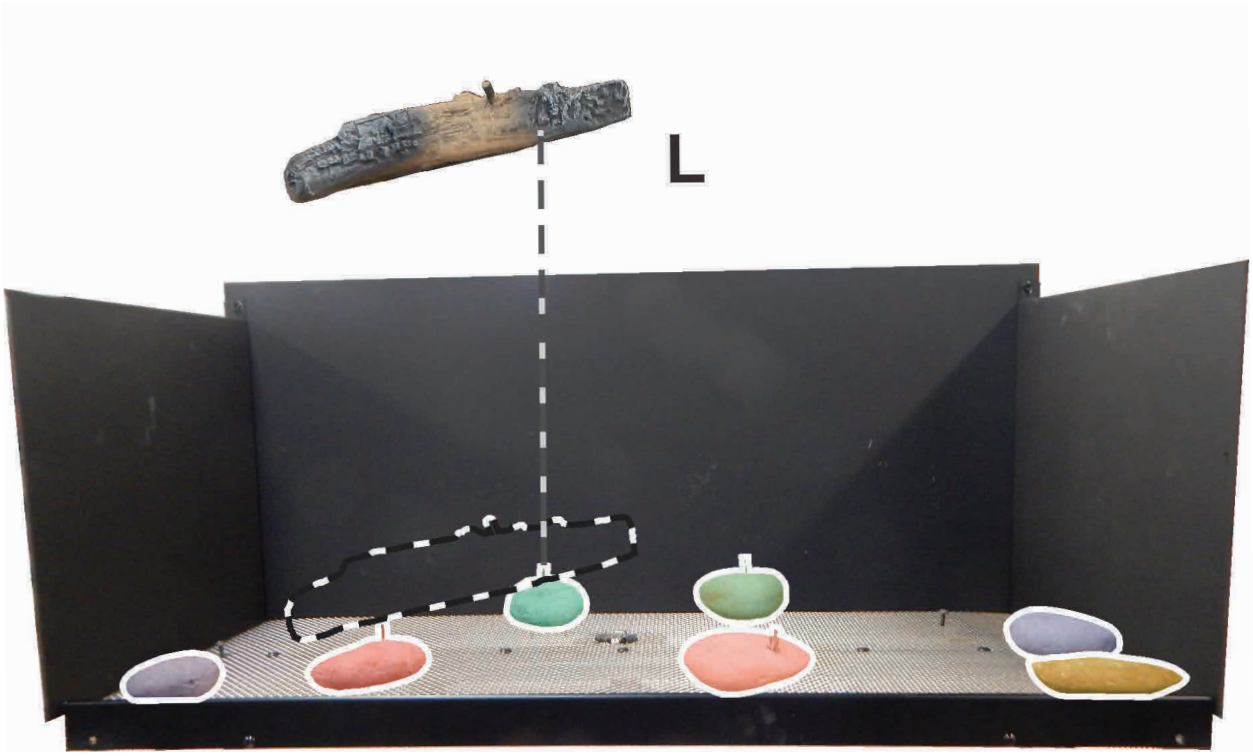


**FRONT**

# ROCK AND LOG PLACEMENT - DVLL36BP MODELS

12. Locate **Log 'O"** and install to the back right corner. Interlock the slotted hole in the bottom of the log with the pin on top of **Rock # E,** then interlock the hole in the bottom right end of the log with pin # 4.
    *For pin locations refer to page 7,* ***Figure 3.***

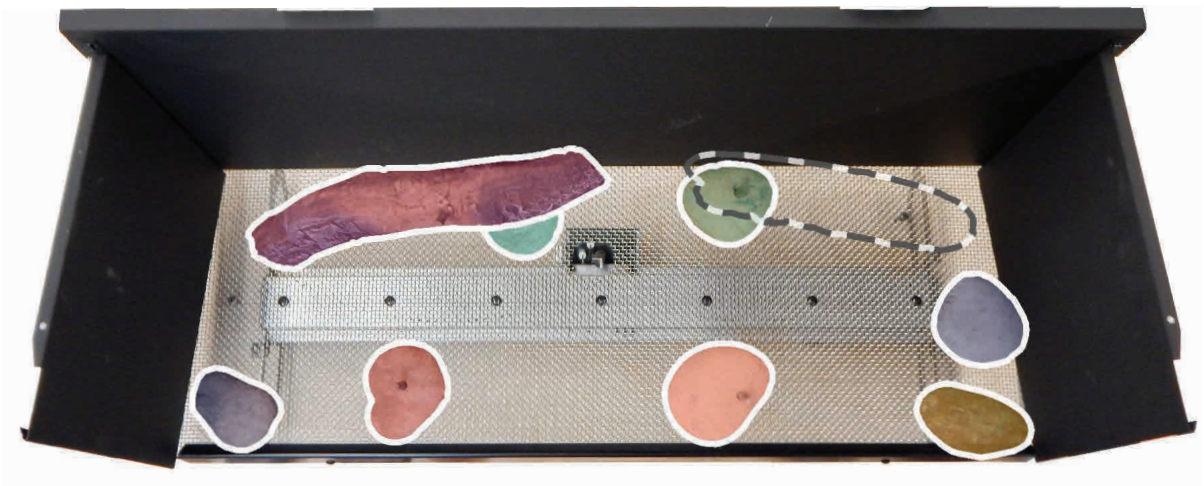

**TOP**

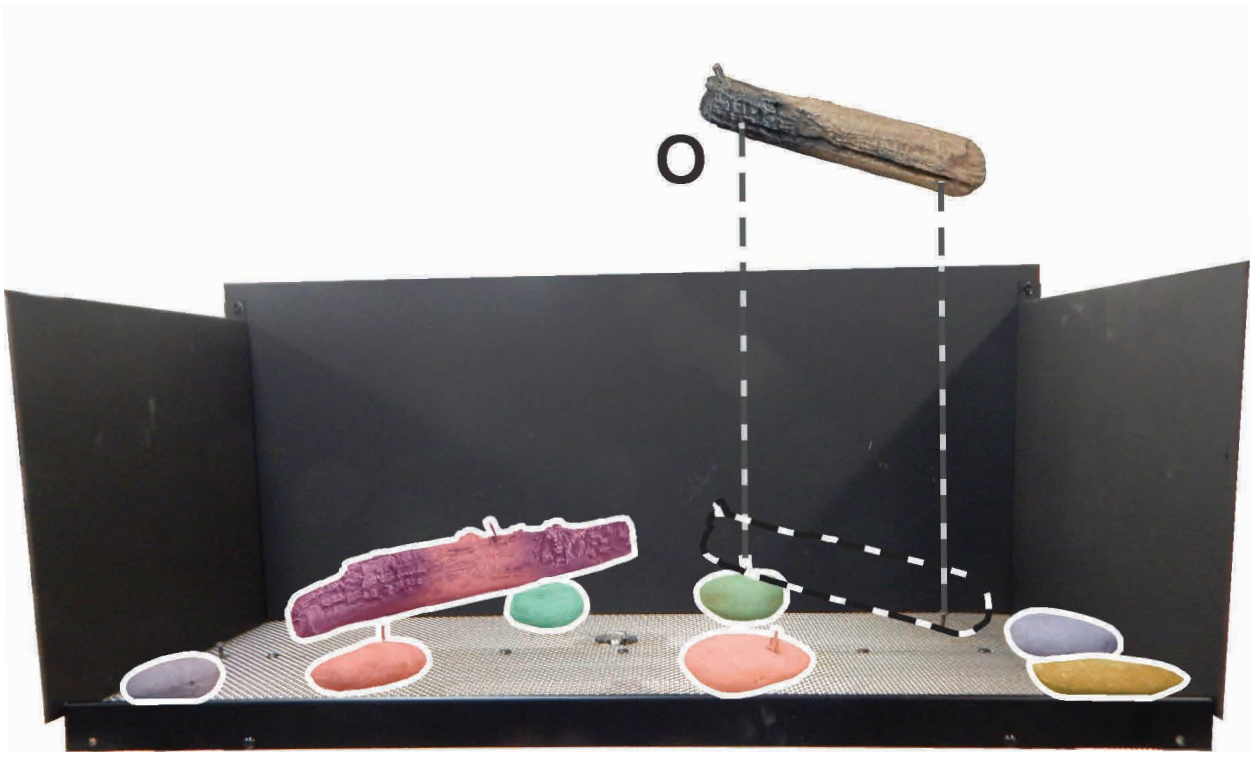


**FRONT**

# ROCK AND LOG PLACEMENT - DVLL36BP MODELS

13. Locate **Rock "B"** and interlock over the top of **Rock "J".**

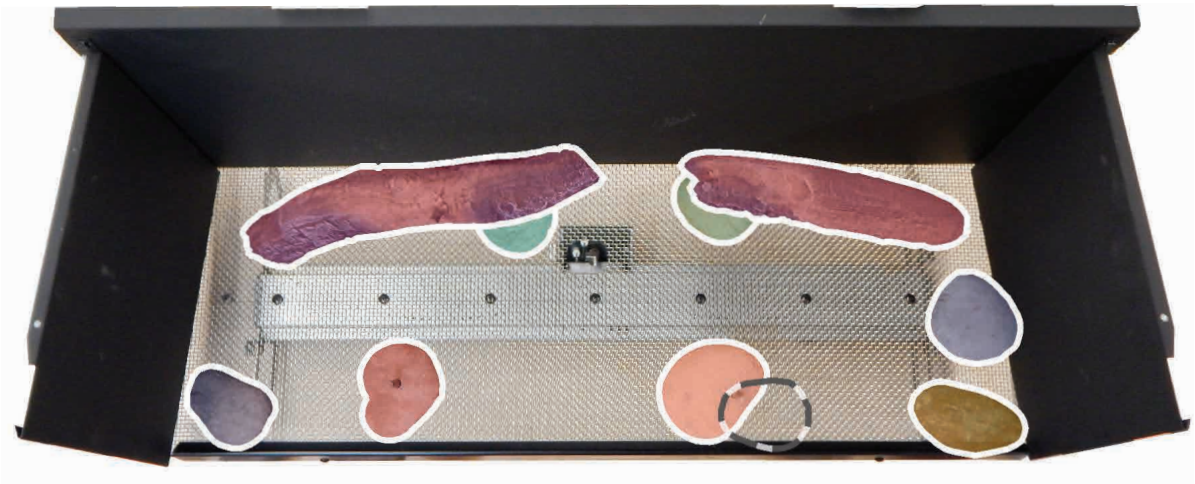

**TOP**

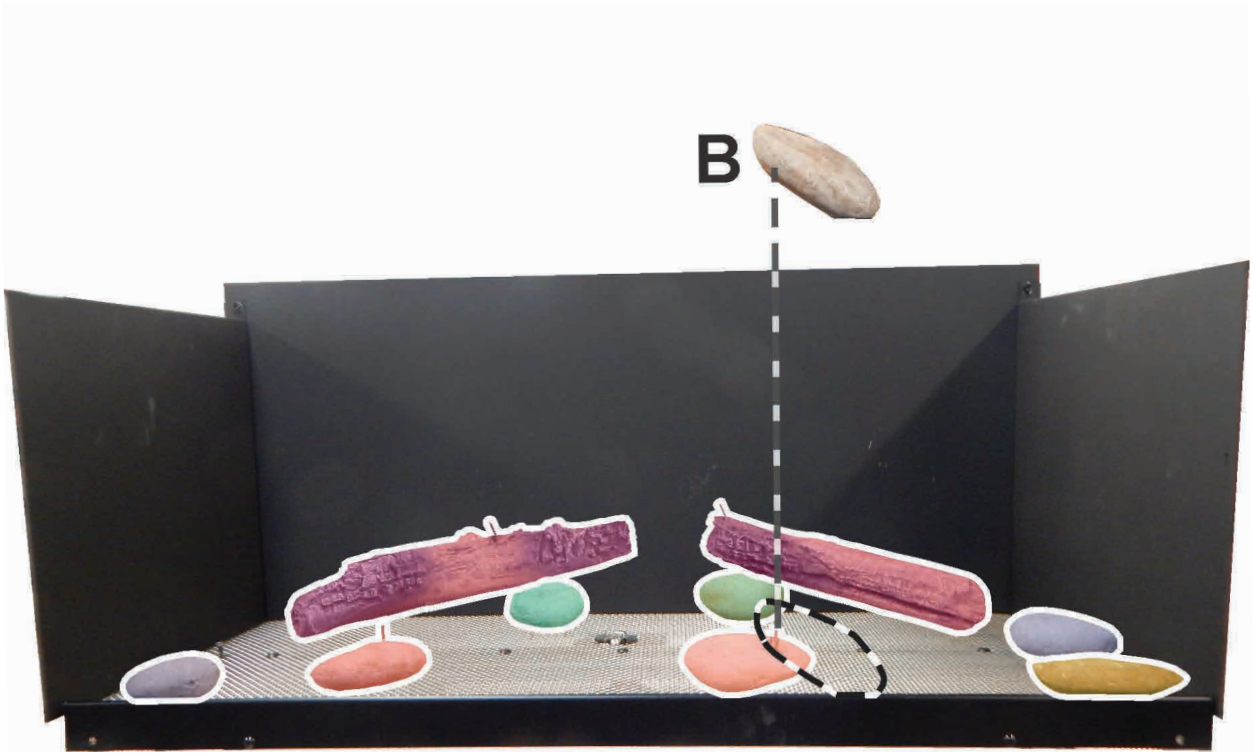


**FRONT**

# ROCK AND LOG PLACEMENT - DVLL36BP MODELS

14. Locate **Log "Q"** and install to the front left corner. Interlock the hole in the bottom left end of the log with pin # 5, then shift **Rock "F"** over until the right end hole in the log matches up with the pin on top of **Rock "F".**
    *For pin locations refer to page 7,* ***Figure 3.***

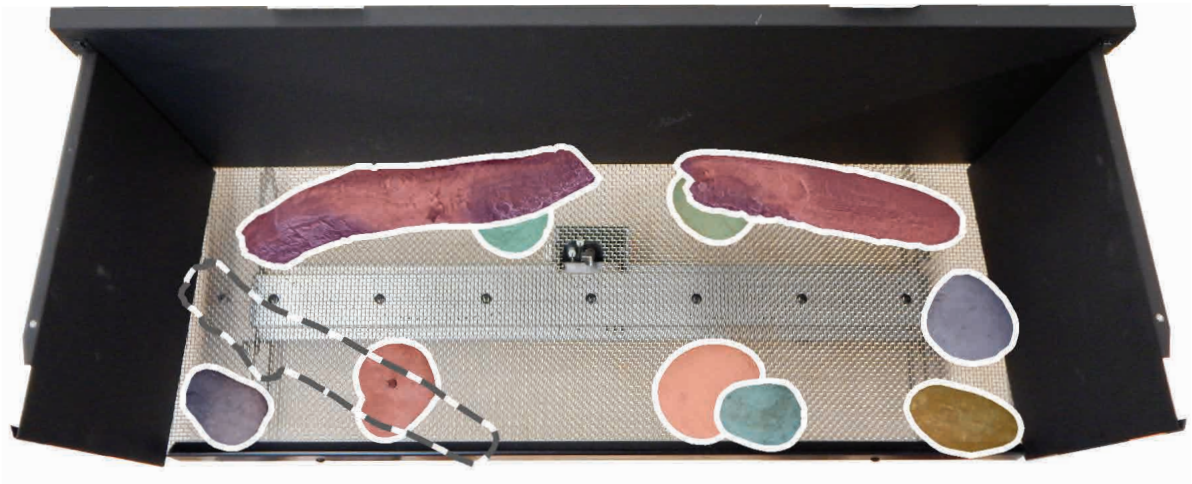

**TOP**

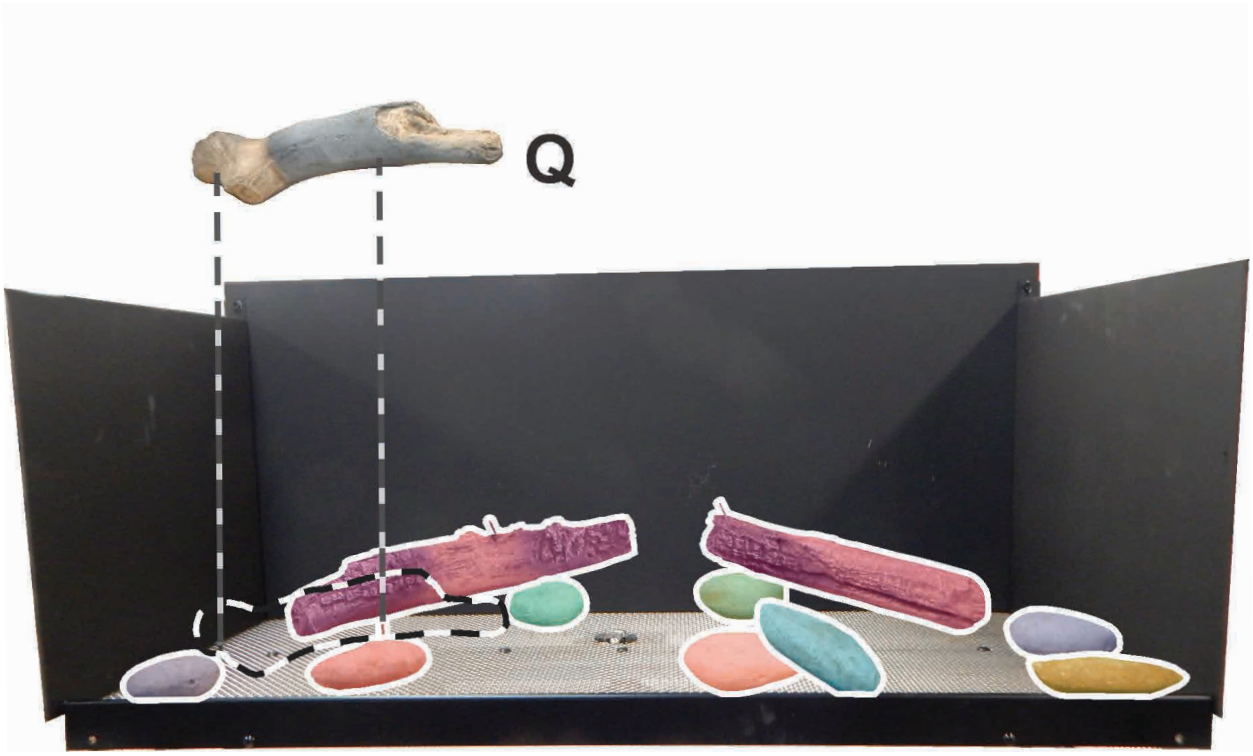


**FRONT**

# ROCK AND LOG PLACEMENT - DVLL36BP MODELS

15. Locate **Log "M"** and interlock the hole in the bottom of the log with the pin on top of **Log "L",** and place the opposite end of this log near the front center, next to the glass retainer.

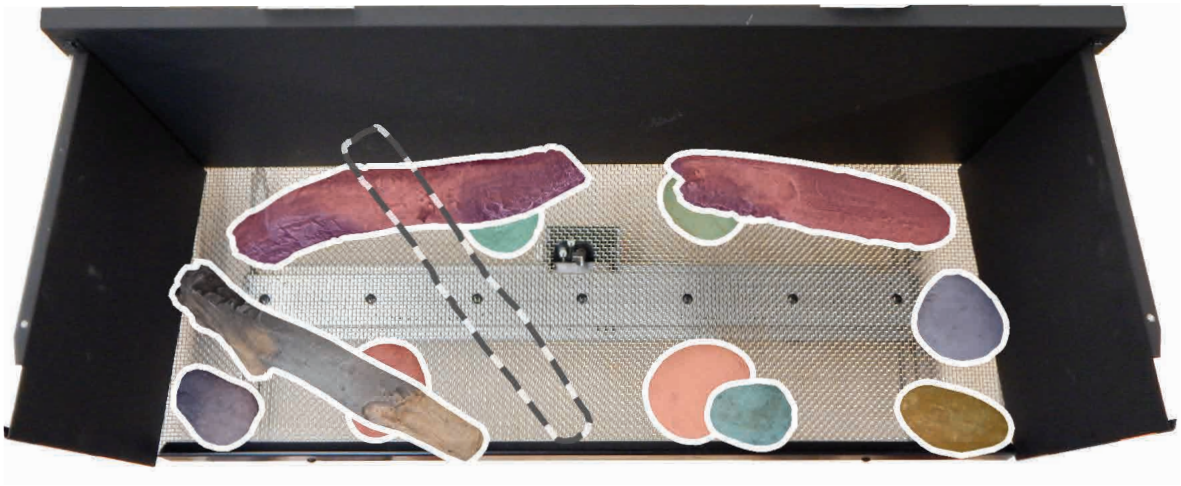

**TOP**

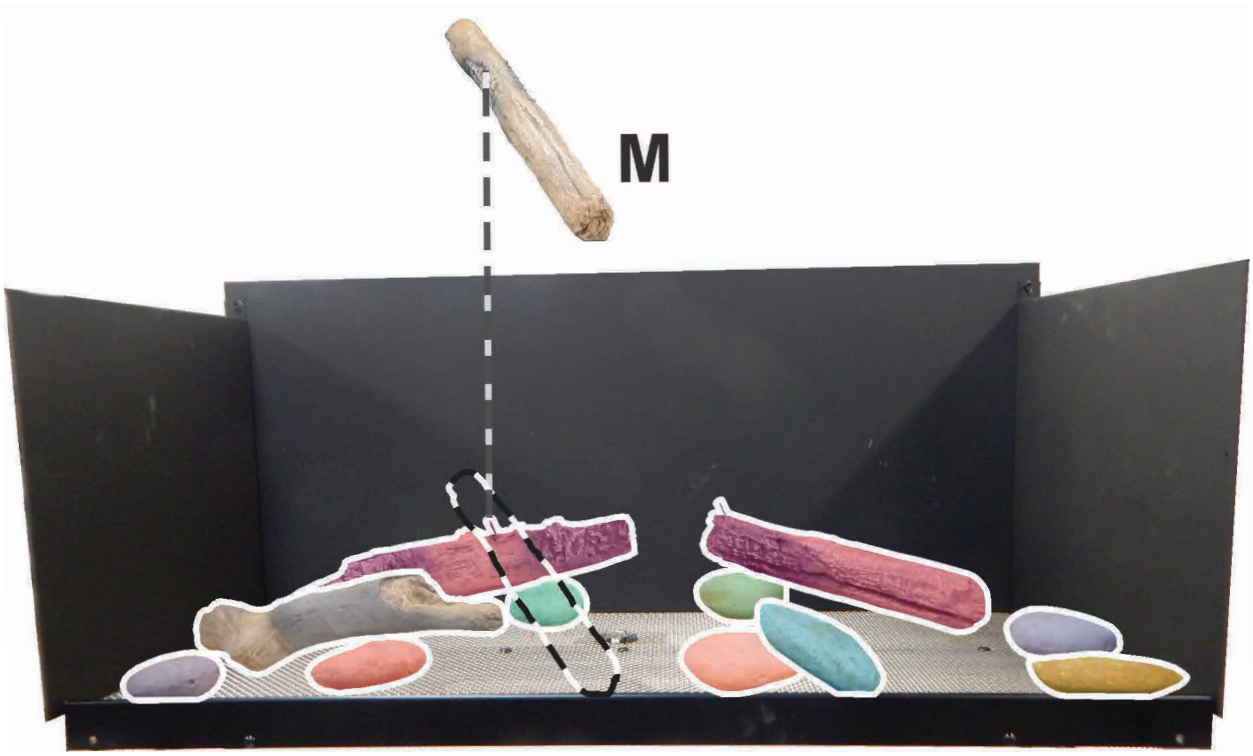


**FRONT**

# ROCK AND LOG PLACEMENT - DVLL36BP MODELS

16. Locate **Log "P"** and interlock the hole in the bottom of the log with the pin on top of **Rock "O",** then place the opposite end of this log on top of **Rock "I".**

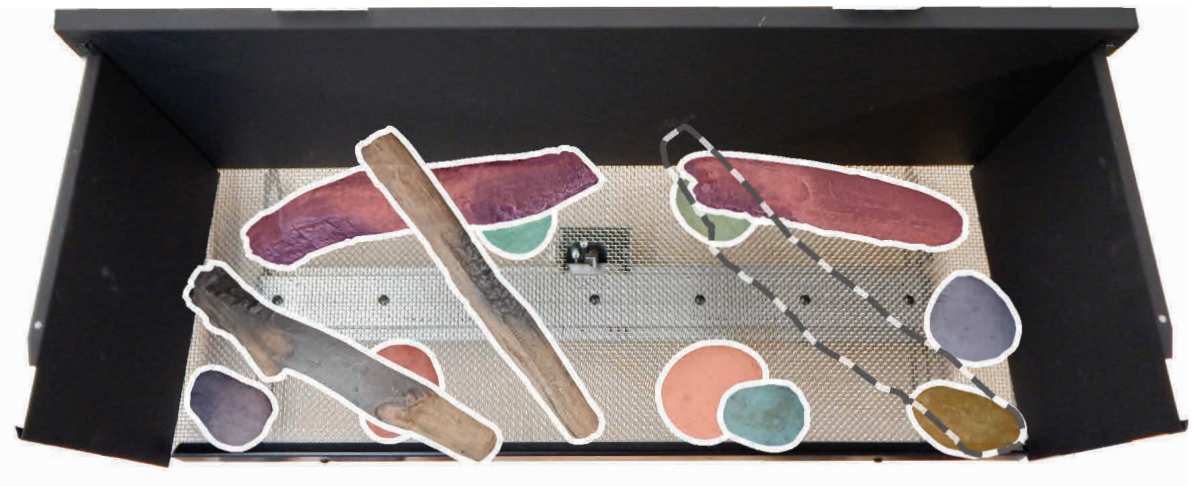

**TOP**

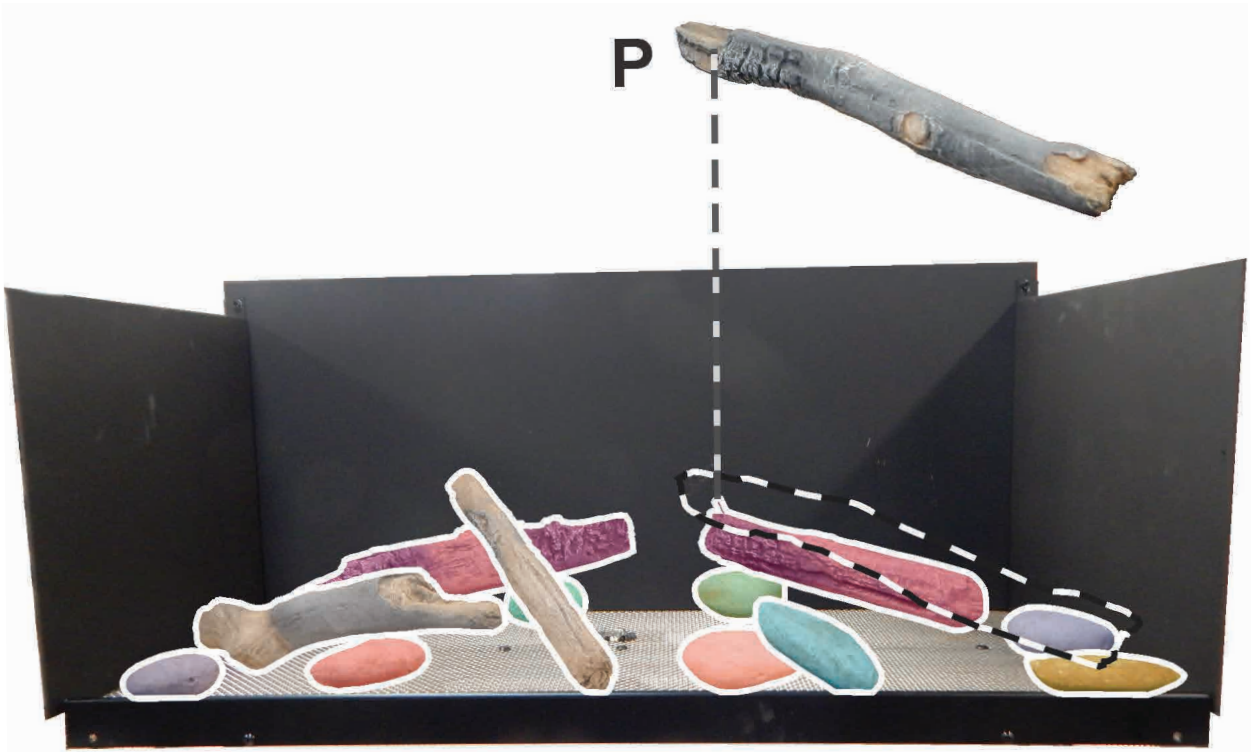


**FRONT**

# ROCK AND LOG PLACEMENT - DVLL36BP MODELS

17. Completed Log and Rock views are shown.
    *For pin locations refer to page 7,* ***Figure 3.***

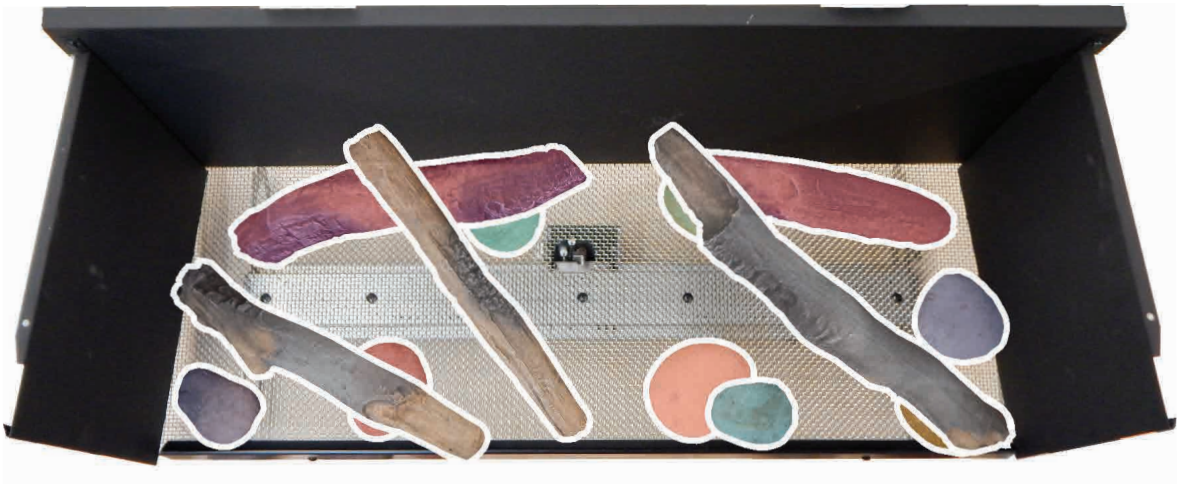

**TOP**

**FRONT**

# ROCK AND LOG PLACEMENT - DVLL36BP MODELS

18. The Log set includes five metal curls which can be placed as recommended. Installation of the metal curls is optional. Do not allow metal curls to be placed in or near the burner flames.

**TOP**

**FRONT**

# COMPLETING INSTALLATION - DVLL36BP MODELS

**Crushed Glass Placement**

1. Add the decorative crushed glass media of your choice at this time. Crushed glass may cover the complete burner screen.
2. Place crushed media over the burner in a single layer. Use just enough crushed glass media to mask the burner screen.

   ***NOTICE:*** 1/4-inch crushed glass media is required on the burner screen.

   **Glass Quantity:**
   **DVLL36BP:** Use up to 4 Sq. Ft. of 1/4-inch crushed glass.

   See the Installation Instructions supplied with the fireplace for more information.

***NOTICE:*** Crushed glass should not be placed on the burner screen area more than one layer deep. Excessive use of crushed glass may create a greater chance of developing soot on logs. Do not allow crushed glass to restrict the pilot flame. Do not place crushed glass in the pilot bracket area.

**Optional Stainless Steel Coils**

Place the coils inside the fireplace. DO NOT place the coils in a location where they will come into contact with flame. If coils come in contact with flame, sooting may occur.

***NOTICE:*** Placement of coils near flame will cause the metal coil to discolor with shades of blue or brown. However, does not effect the performance of the fireplace.

**Final Steps**

1. Re-install the glass door assembly. Test fire to ensure there is minimal contact between the flame and the logs, rocks and curls.
2. If the test fire is acceptable, re-install the barrier screen assembly.
3. If during the test firing there seems to be significant flame impingement on the cross logs, there are two steps that can be taken to reduce the impingement:
   a. Pivot log left or right to move away from flame.
   b. Thin out crushed glass directly under the cross log. This can reduce the height of the flame directly under the log.

# ROCK AND LOG PLACEMENT - DVLL48BP MODELS

**Tools Needed:**

- Protective Gloves
- Phillips Screw Driver or Power Drill with Phillips Drive

Before you begin: Do not, handle these logs with your bare hands! Always wear gloves to prevent skin irritation. After handling logs, wash your hands gently with soap and water.

**All Logs**

The positioning of the logs is critical to the safe and clean operation of this heater. Sooting and other problems may result if the logs are not properly and firmly positioned in the appliance. **Refer to Figure 4 for the following warning.**

**⚠ WARNING**

**Failure to position the parts in accordance with this diagram or failure to use only parts specifically approved with this appliance may result in property damage or personal injury.**

**Attention:** Refer to Pages 4 and 5 Parts List and Parts View to order logs or rocks.

**NOTE:** Once the installation is complete with the logs, rocks, and crushed glass media in place, operate the fireplace to verify flame appearance. If there are flames directly impinging a log, turn off fireplace, then remove the crushed glass media directly below where the flame impingement occurred. This should eliminate sooting on the log, and provide a more pleasing flame appearance.

**Installation of the Pins for Log and Rock Placement**

The Log and Rock Hardware kit includes twelve 8-32 x 3/4" long self-threading screws, eight #10 x 1-1/2" long sheet metal screws, and twelve 9/16" long spacers. For this log and rock set, only eight #10 x 1-1/2" long screws and spacers are needed. Install the screws and spacers prior to the log and rock placement.

**NOTE:** The fireplace liner must be installed prior to installing the log and rock spacers so interference with the locator pins is avoided.

Use a power drill with a Phillips drive to install the screws through a spacer at each of the eight pin locations dimensioned in the burner screen. **See Figures 5 and 6.** These will be the locator pins for the logs and rocks.

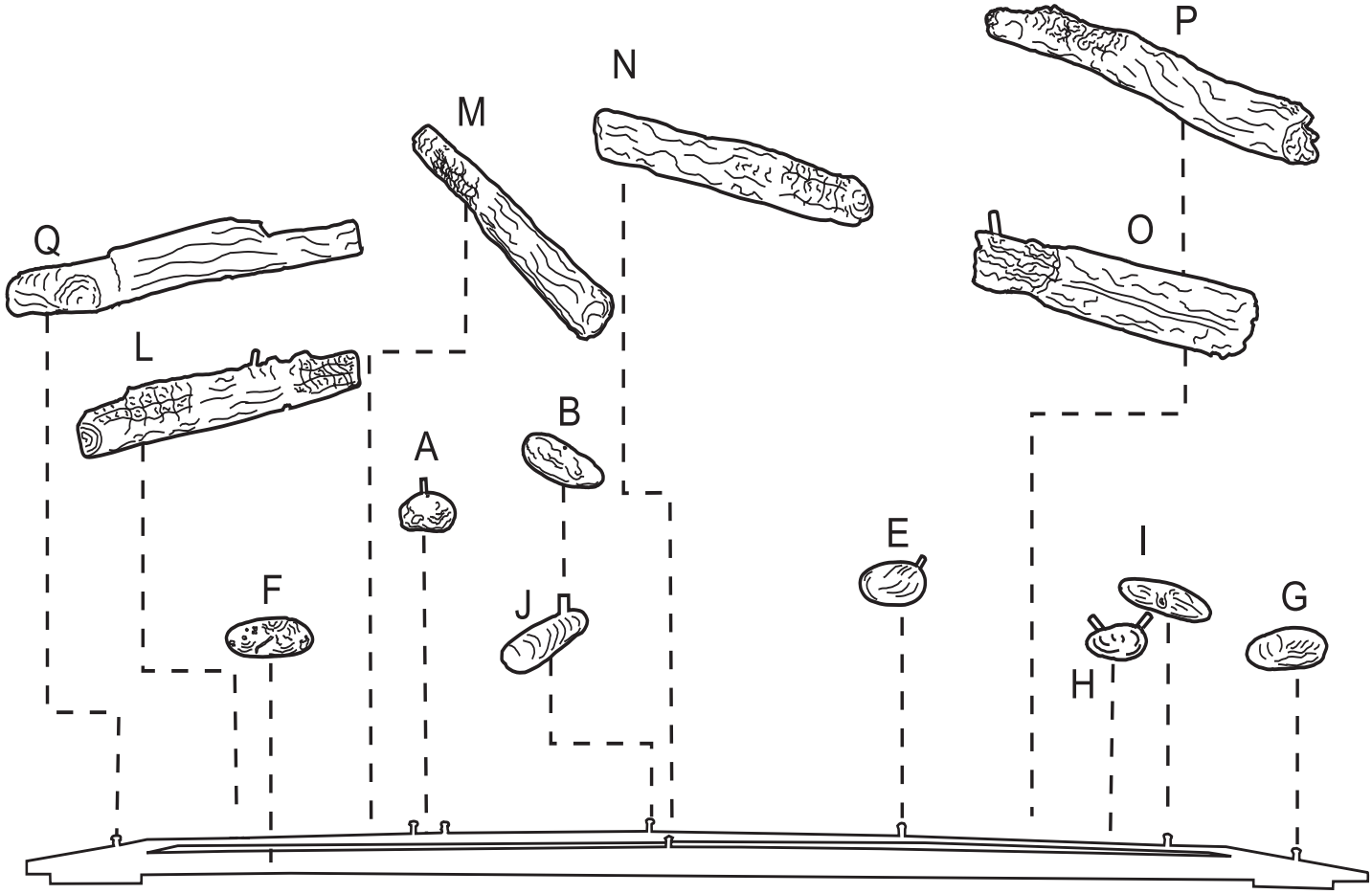


**Rock and Log Placement - Figure 4**

# INSTALLATION OF LOCATING PINS - DVLL48BP MODELS

1. Locate the hardware pack and remove eight # 10 x 1-1/2" long sheet metal screws and eight metal spacers.
2. Using a tape measure and felt tip marker, locate and mark the seven pin locations required as indicated by **Figure 5.**
3. Using a Phillips screwdriver, install the eight screws and spacers. Do not overtighten.

**NOTE:** When installing the Logs and Rocks onto the screws and spacers, some holes in the Logs and Rocks may be slightly undersized, therefore, it may be necessary to gently work the logs and/or rocks onto the pins to obtain a proper fit.

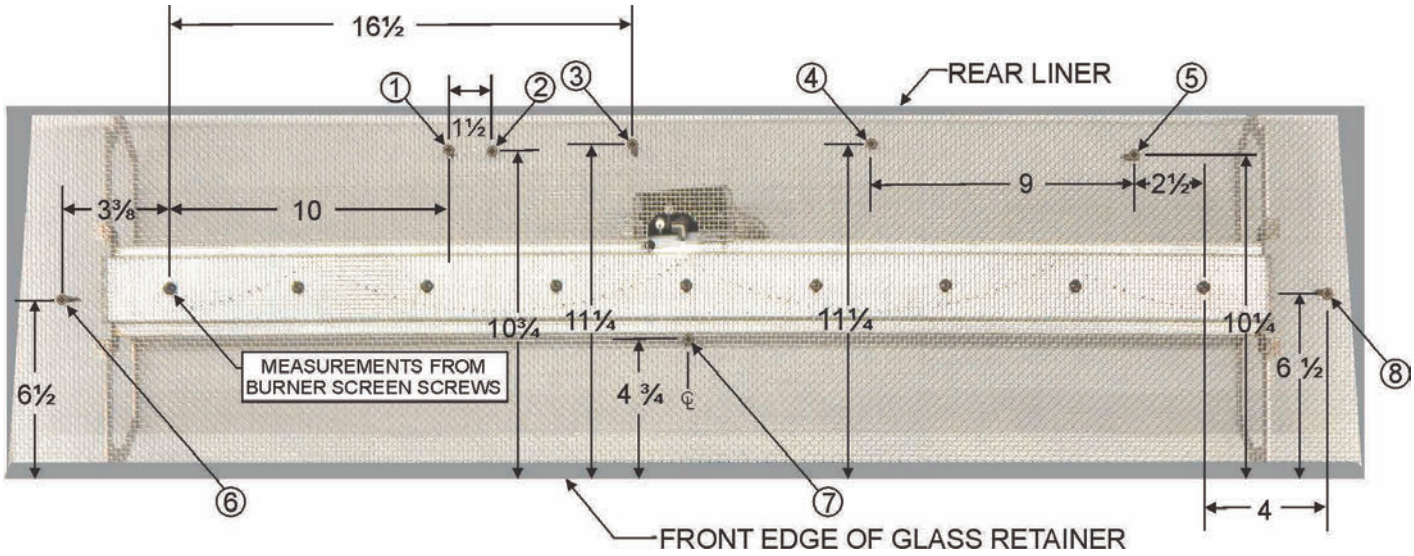


**Locating Pin Location Measurements - Figure 5**

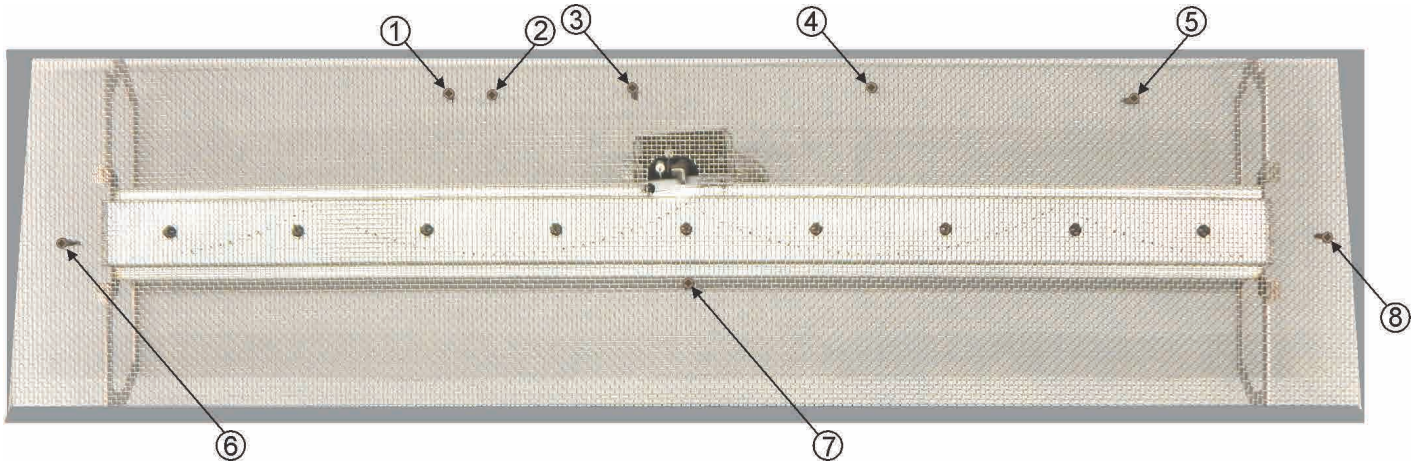


**Pin Locations (1 through 8) - Figure 6**

# ROCK AND LOG PLACEMENT - DVLL48BP MODELS

4. Locate **Rock "A"** and install onto pin 1 and pin 2.
   *For pin locations refer to page 25,* ***Figure 6.***

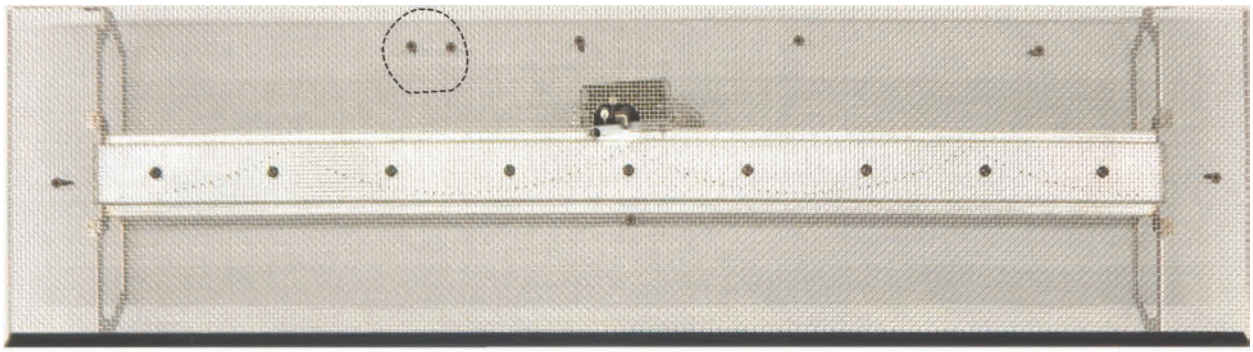

**TOP**

**FRONT**

# ROCK AND LOG PLACEMENT - DVLL48BP MODELS

5. Locate **Rock "J"** and install onto pin # 3.
   *For pin locations refer to page 25,* ***Figure 6.***

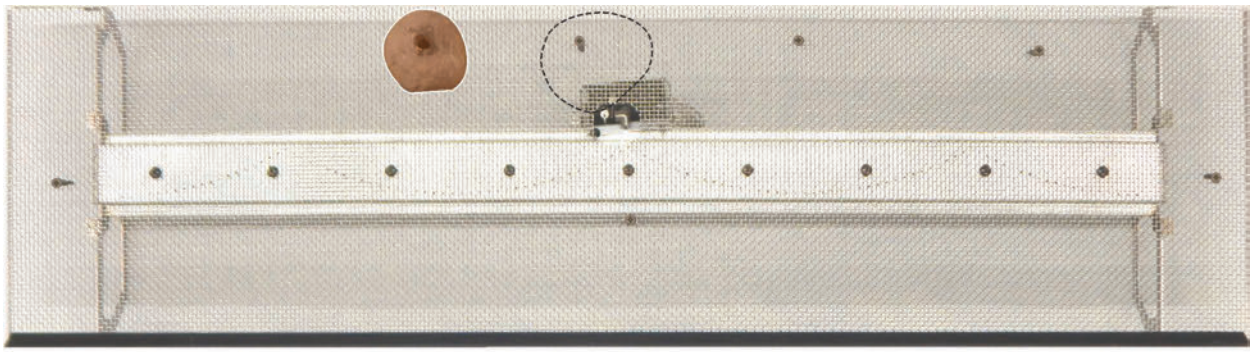

**TOP**

**FRONT**

# ROCK AND LOG PLACEMENT - DVLL48BP MODELS

6. Locate **Rock "E"** and install onto pin # 4.
   *For pin locations refer to page 25,* ***Figure 6.***

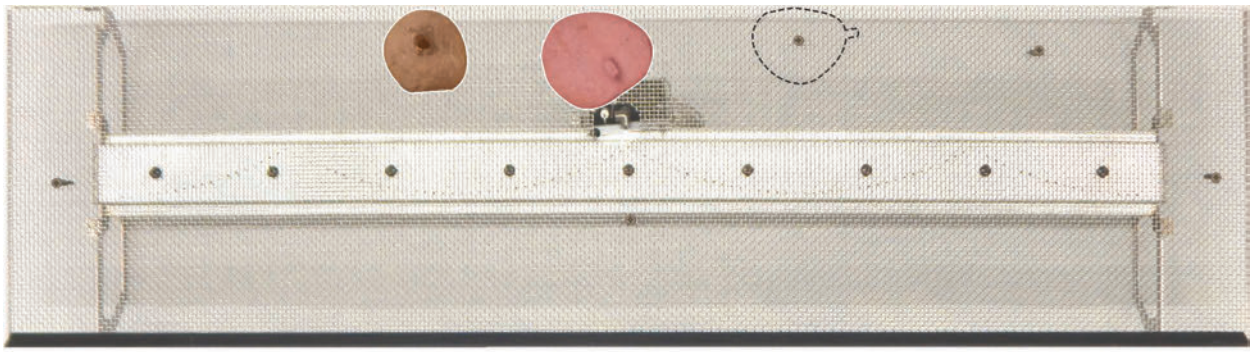

**TOP**

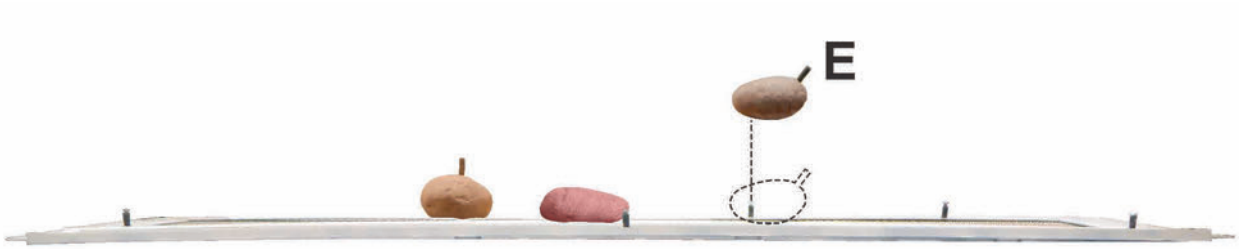


**FRONT**

# ROCK AND LOG PLACEMENT - DVLL48BP MODELS

7. Locate **Rock "F"** and place it on the burner screen approximately 10"-12" from the front left corner of the fireplace. It should be placed just behind the front glass retainer.

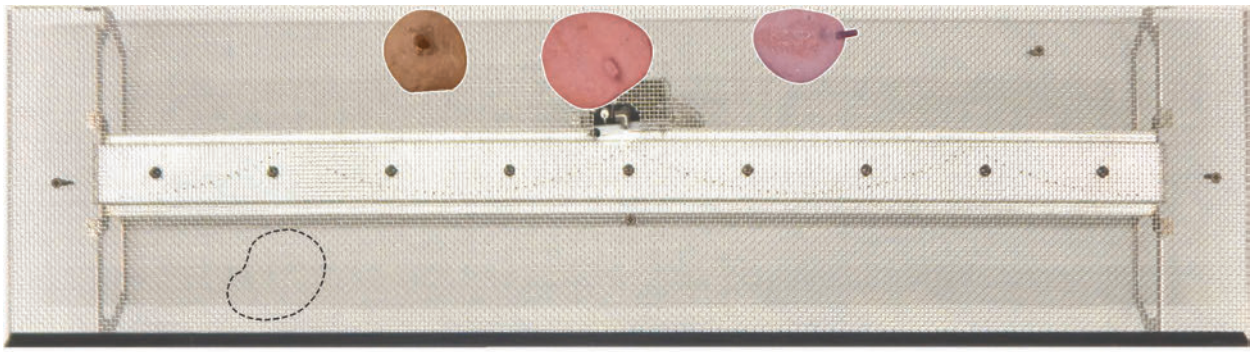

**TOP**

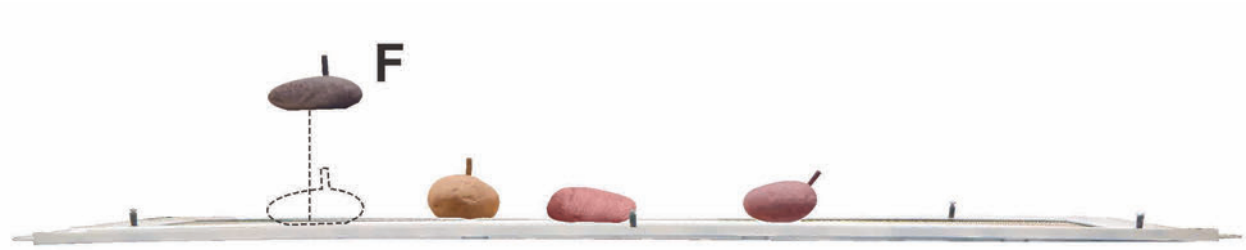


**FRONT**

# ROCK AND LOG PLACEMENT - DVLL48BP MODELS

8. Locate **Rock "G"** and install onto pin # 8.
   *For pin locations refer to page 25,* ***Figure 6.***

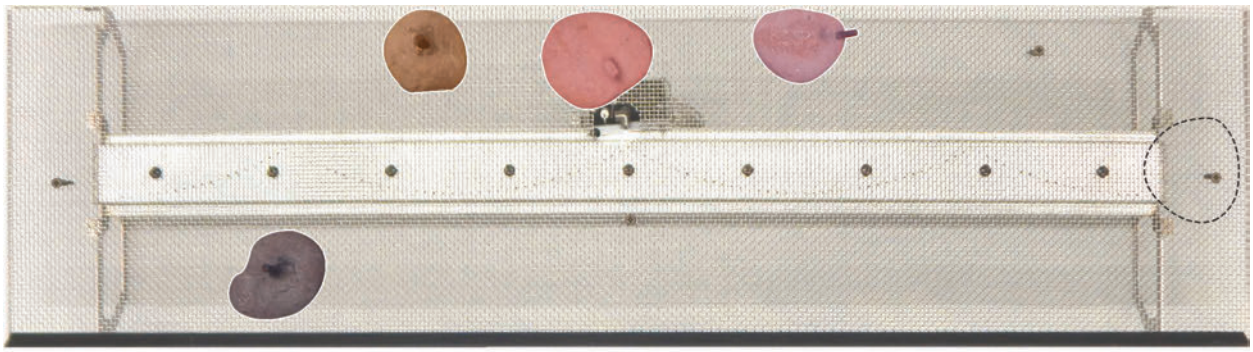

**TOP**

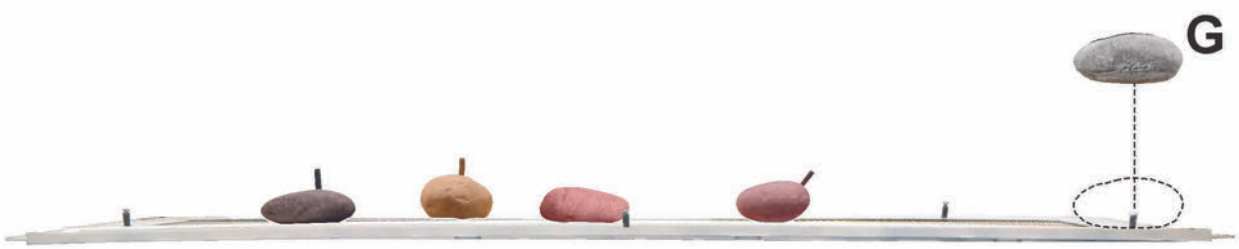


**FRONT**

# ROCK AND LOG PLACEMENT - DVLL48BP MODELS

9. Locate **Rock "H"** and place it on the burner screen approximately 7"-8" to the right of pin # 7, and positioned just behind the front glass retainer.
   *For pin locations refer to page 25,* ***Figure 6.***

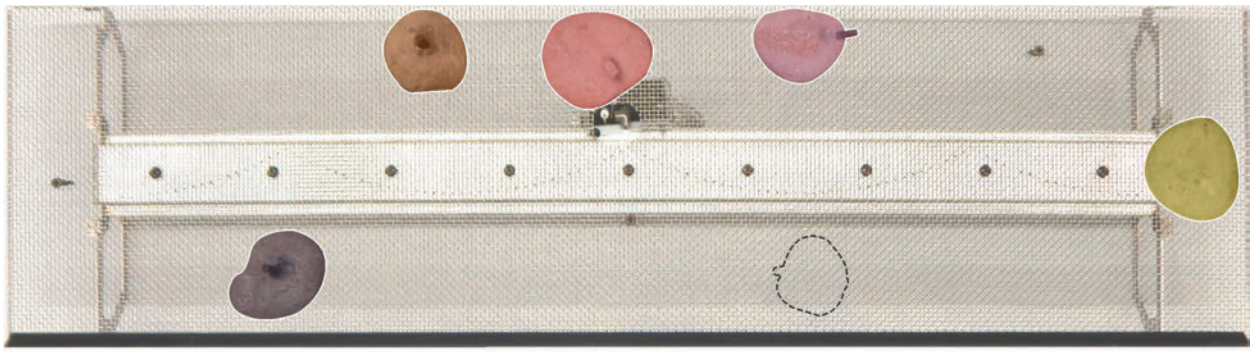

**TOP**

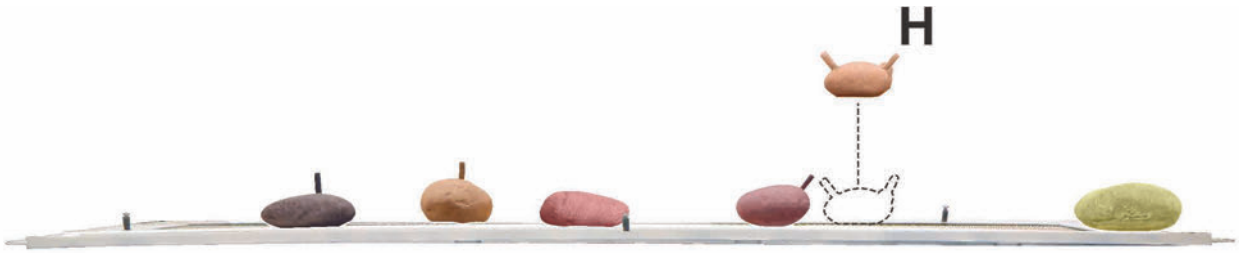


**FRONT**

# ROCK AND LOG PLACEMENT - DVLL48BP MODELS

10. Locate **Rock "I"** and place it over the pin on the right side of **Rock "H".** It should be placed between the burner and the front glass retainer.

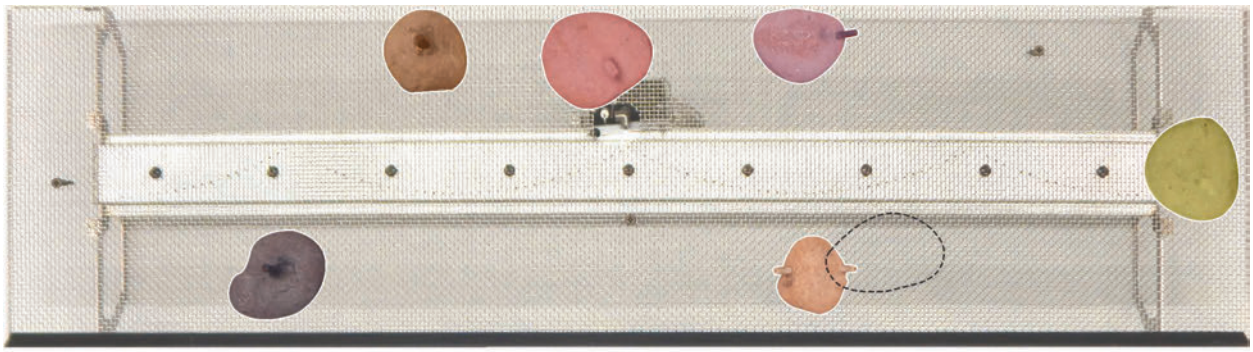

**TOP**

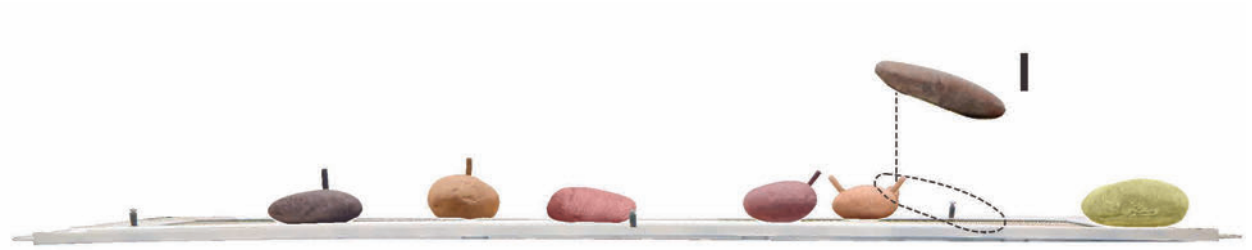


**FRONT**

# ROCK AND LOG PLACEMENT - DVLL48BP MODELS

11. Locate **Rock "B"** and interlock over the top of **Rock "J".** Rotate **Rock "B"** so it is against the rear liner.

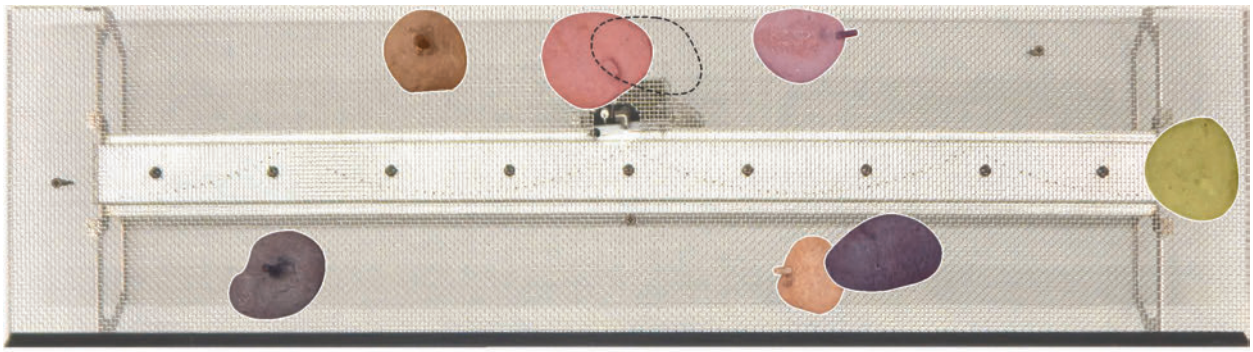

**TOP**

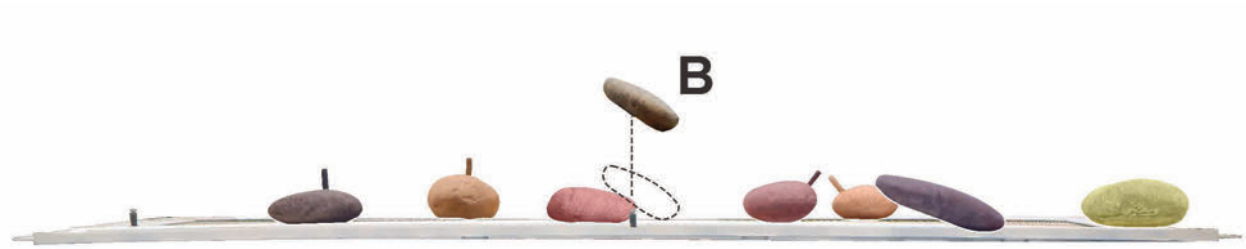


**FRONT**

# ROCK AND LOG PLACEMENT - DVLL48BP MODELS

12. Locate **Log "L"** and install to the back left corner. Interlock the hole in the bottom of the log with the pin on top of **Rock "A".**

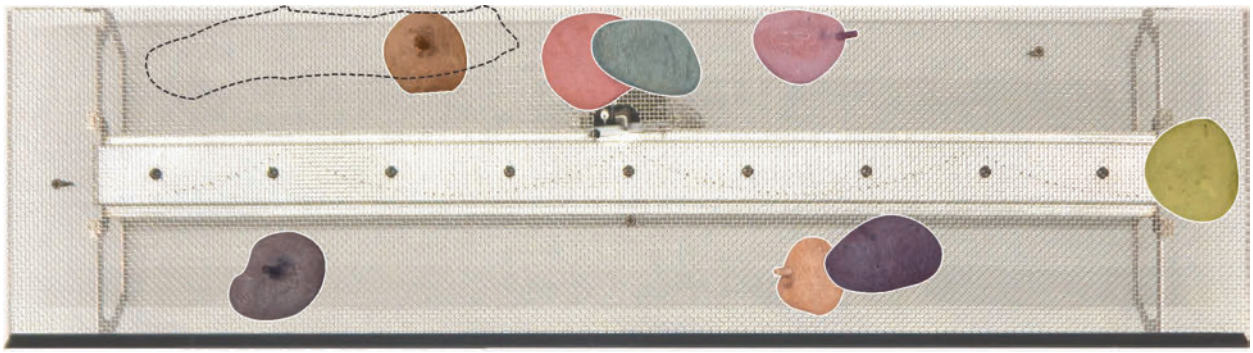

**TOP**

**FRONT**

# ROCK AND LOG PLACEMENT - DVLL48BP MODELS

13. Locate **Log "M"** and interlock the hole in the bottom of the log with the pin on top of **Log "L",** and place the opposite end of this log approximately 6" left of pin # 7 and up to the glass retainer.
    *For pin locations refer to page 25,* ***Figure 6.***

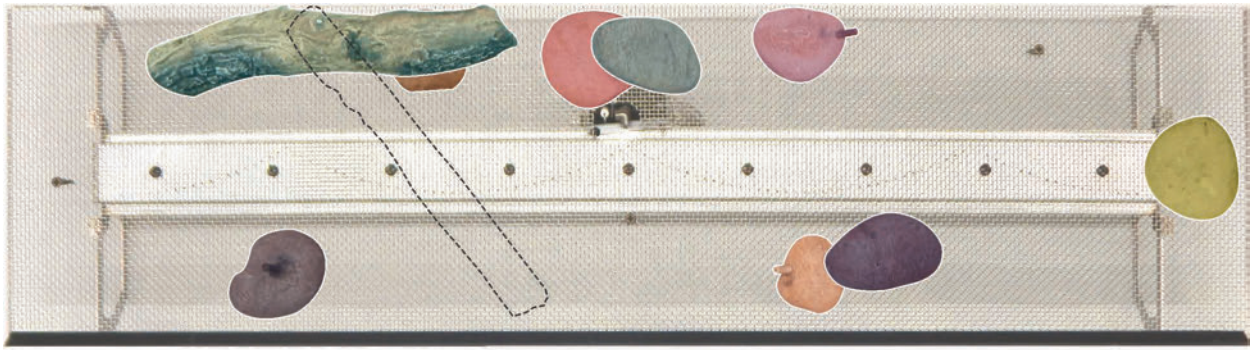

**TOP**

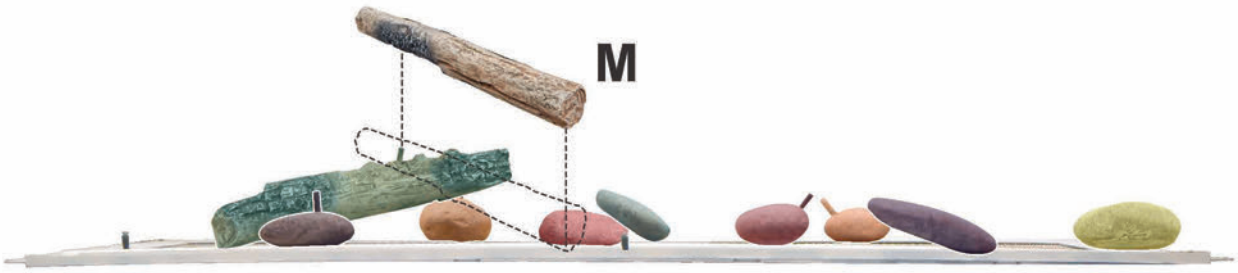


**FRONT**

# ROCK AND LOG PLACEMENT - DVLL48BP MODELS

14. Locate **Log "N",** then interlock the left end of the log with pin # 7, and interlock the right end with the pin located on **Rock "H".** *For pin locations refer to page 25,* ***Figure 6.***

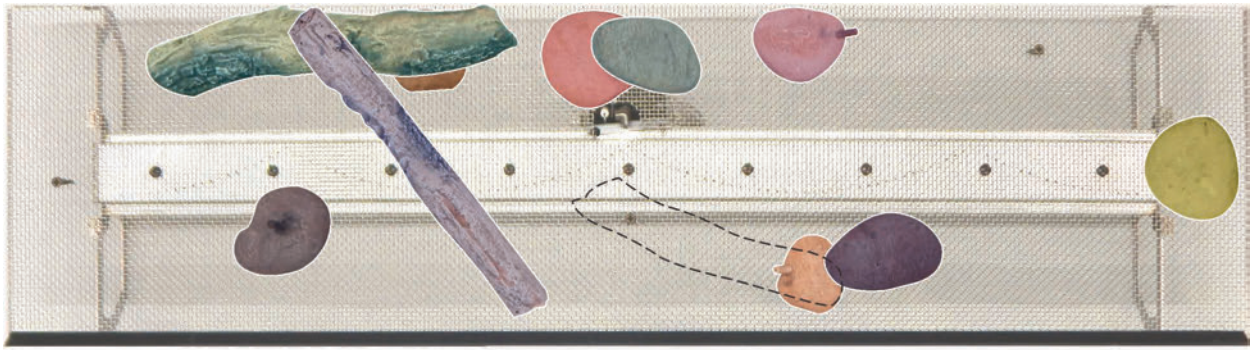

**TOP**

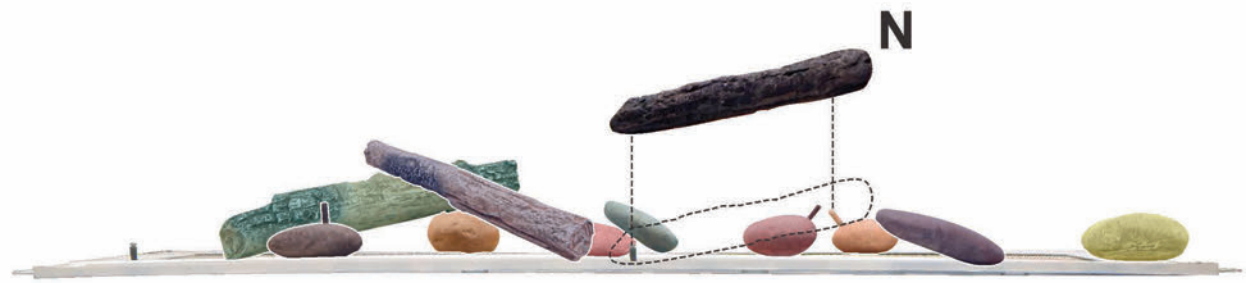


**FRONT**

# ROCK AND LOG PLACEMENT - DVLL48BP MODELS

15. Locate **Log 'O"** and install to the back right corner. Interlock the slotted hole in the bottom of the log with the pin on top of **Rock # E,** then interlock the hole in the bottom right end of the log with pin # 5.
    *For pin locations refer to page 25,* ***Figure 6.***

**TOP**

**FRONT**

# ROCK AND LOG PLACEMENT - DVLL48BP MODELS

16. Locate **Log "P",** then interlock the hole in the bottom of the log with the pin on top of **Log "O",** then place the opposite end of this log on the burner screen just to the left of **Rock "G"** and forward to the glass retainer.

**TOP**

**FRONT**

# ROCK AND LOG PLACEMENT - DVLL48BP MODELS

17. Locate **Log "Q"** and install at the front left corner. Interlock the hole in the bottom left end of the log with pin # 6, then shift **Rock "F"** over until the hole in the right end of the log matches up with the pin on top of **Rock "F".**
    *For pin locations refer to page 25,* ***Figure 6.***

**TOP**

**FRONT**

# ROCK AND LOG PLACEMENT - DVLL48BP MODELS

18. Completed Log and Rock views shown.
    *For pin locations refer to page 25,* ***Figure 6.***

**TOP**

**FRONT**

# ROCK AND LOG PLACEMENT - DVLL48BP MODELS

19. The Log set includes five metal curls which can be placed as recommended. Installation of the metal curls is optional. Do not allow metal curls to be placed in or near the burner flames.

**TOP**

**FRONT**

# COMPLETING INSTALLATION - DVLL48BP MODELS

**Crushed Glass Placement**

1. Add the decorative crushed glass media of your choice at this time. Crushed glass may cover the complete burner screen.
2. Place crushed media over the burner in a single layer. Use just enough crushed glass media to mask the burner screen.

   ***NOTICE:*** 1/4-inch crushed glass media is required on the burner screen.

   **Glass Quantity:**
   **DVLL48BP:** Use up to 5 Sq. Ft. of 1/4-inch crushed glass.

   See the Installation Instructions supplied with the fireplace for more information.

***NOTICE:*** Crushed glass should not be placed on the burner screen area more than one layer deep. Excessive use of crushed glass may create a greater chance of developing soot on logs. Do not allow crushed glass to restrict the pilot flame. Do not place crushed glass in the pilot bracket area.

**Optional Stainless Steel Coils**

Place the coils inside the fireplace. DO NOT place the coils in a location where they will come into contact with flame. If coils come in contact with flame, sooting may occur.

***NOTICE:*** Placement of coils near flame will cause the metal coil to discolor with shades of blue or brown. However, does not effect the performance of the fireplace.

**Final Steps**

1. Re-install the glass door assembly. Test fire to ensure there is minimal contact between the flame and the logs, rocks and curls.
2. If the test fire is acceptable, re-install the barrier screen assembly.
3. If during the test firing there seems to be significant flame impingement on the cross logs, there are two steps that can be taken to reduce the impingement:
   a. Pivot log left or right to move away from flame.
   b. Thin out crushed glass directly under the cross log. This can reduce the height of the flame directly under the log.

# ROCK AND LOG PLACEMENT - DVLL60BP MODELS

**Tools Needed:**

- Protective Gloves
- Phillips Screw Driver or Power Drill with Phillips Drive

Before you begin: Do not, handle these logs with your bare hands! Always wear gloves to prevent skin irritation. After handling logs, wash your hands gently with soap and water.

**All Logs**

The positioning of the logs is critical to the safe and clean operation of this heater. Sooting and other problems may result if the logs are not properly and firmly positioned in the appliance.
**Refer to Figure 7 for the following warning.**

| ⚠ WARNING |
|---|
| **Failure to position the parts in accordance with this diagram or failure to use only parts specifically approved with this appliance may result in property damage or personal injury.** |

**Attention:** Refer to Pages 4 and 5 Parts List and Parts View to order logs or rocks.

***NOTICE:*** Once the installation is complete with the logs, rocks, and crushed glass media in place, operate the fireplace to verify flame appearance. If there are flames directly impinging a log, turn off fireplace, then remove the crushed glass media directly below where the flame impingement occurred. This should eliminate sooting on the log, and provide a more pleasing flame appearance.

**Installation of the Pins for Log and Rock Placement**

The Log and Rock kit includes twelve 8-32x3/4" long self-threading screws, and twelve 9/16" long spacers that will need to be installed prior to the log and rock placement.

**NOTE:** It is highly recommended that the fireplace liner be installed prior to installing the log and rock spacers so interference with the locator pins is avoided.

Use a standard Phillips screwdriver or power drill with a Phillips drive to install the screws through a spacer at each of the twelve pilot hole locations provided in the burner cover. **See Figure 8.** These will be the locator pins for the logs and rocks.

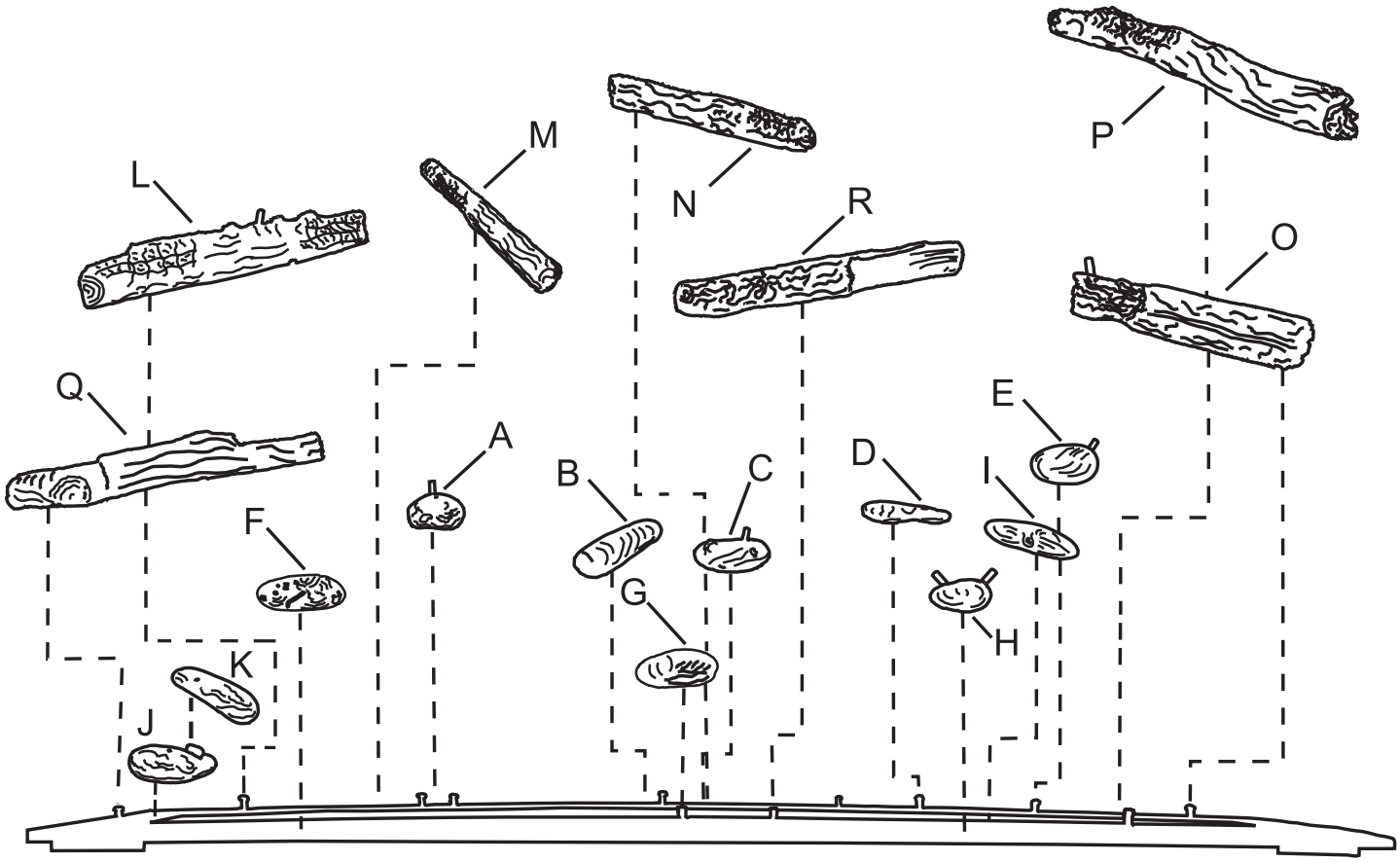


**Rock and Log Placement - Figure 7**

# ROCK AND LOG PLACEMENT - DVLL60BP MODELS

1. Place **"Rock D"** onto **Burner Pin #6.** Do not allow the rock to rest on the pilot or igniter probes.

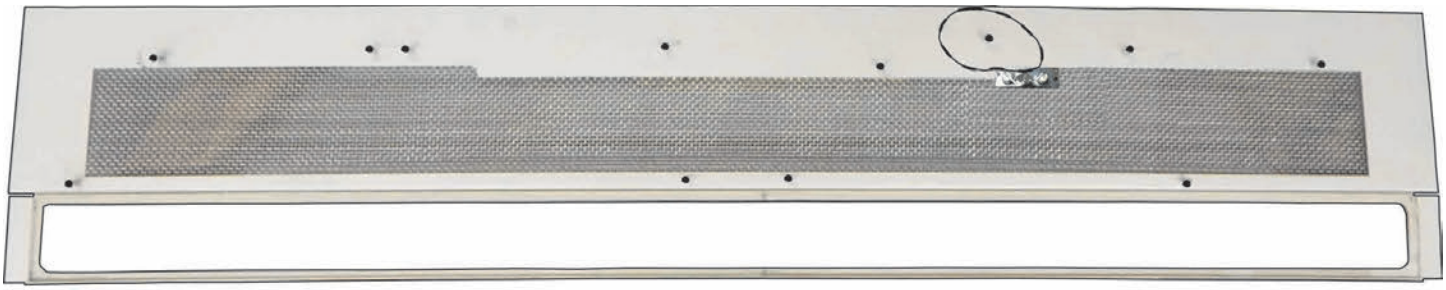

## TOP VIEW

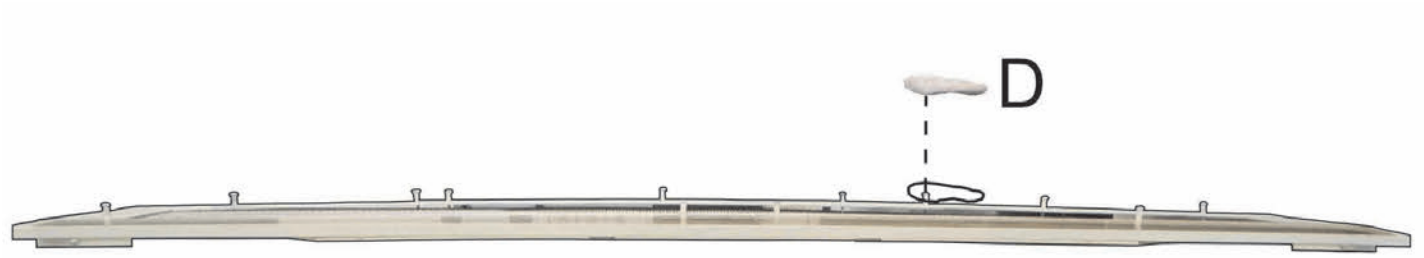


## FRONT VIEW

## DVLL60BP ONLY

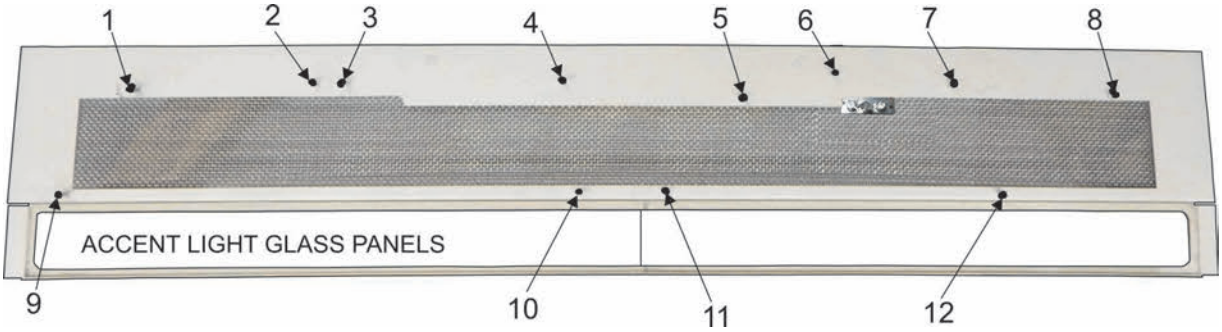


**BURNER PIN LOCATIONS - Figure 8**

# ROCK AND LOG PLACEMENT - DVLL60BP MODELS

2. Place **"Rock H"** on the burner cover and accent glass panel. Position the rock with the locater pins to the left and right. This rock may be adjusted later to align with **"Log R".**

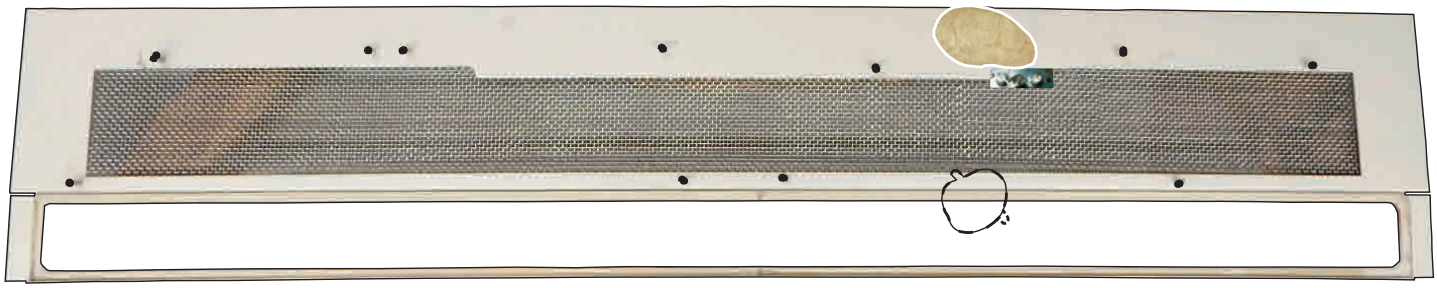

## TOP VIEW

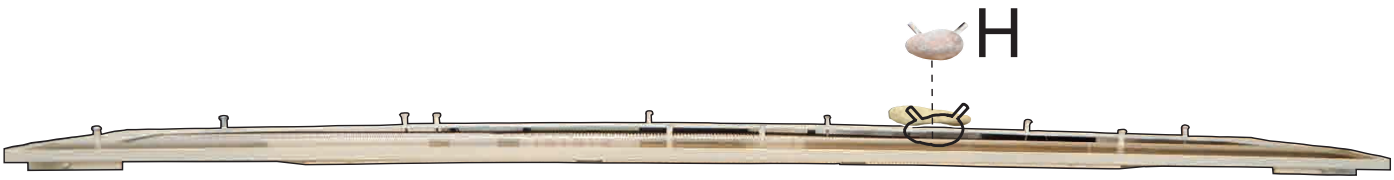


## FRONT VIEW

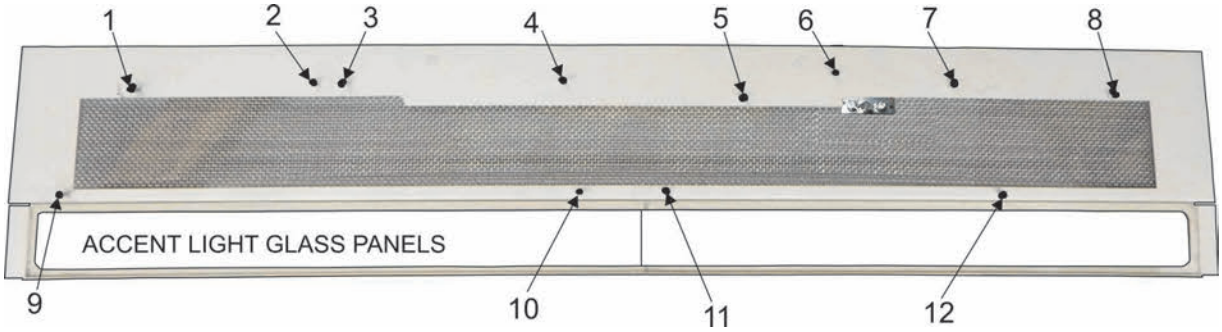


**BURNER PIN LOCATIONS**

# ROCK AND LOG PLACEMENT - DVLL60BP MODELS

3. Place **"Rock C"** on **Burner Pin #4.** The pin must be positioned slightly to the right. This rock may be adjusted later to align with **"Log N".**

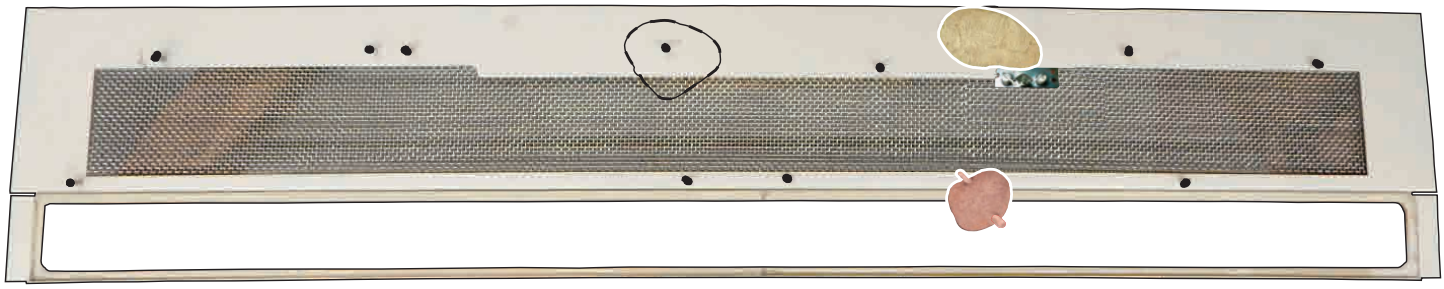

**TOP VIEW**

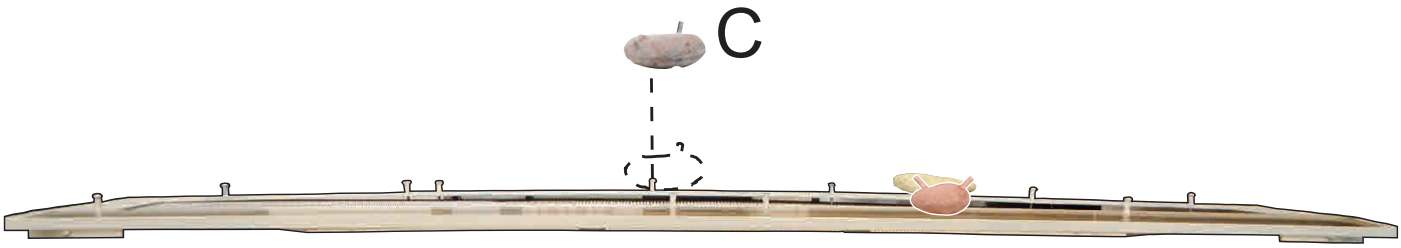


**FRONT VIEW**

# ROCK AND LOG PLACEMENT - DVLL60BP MODELS

4. Place **"Rock A"** onto **Burner Pin #2 and #3.**

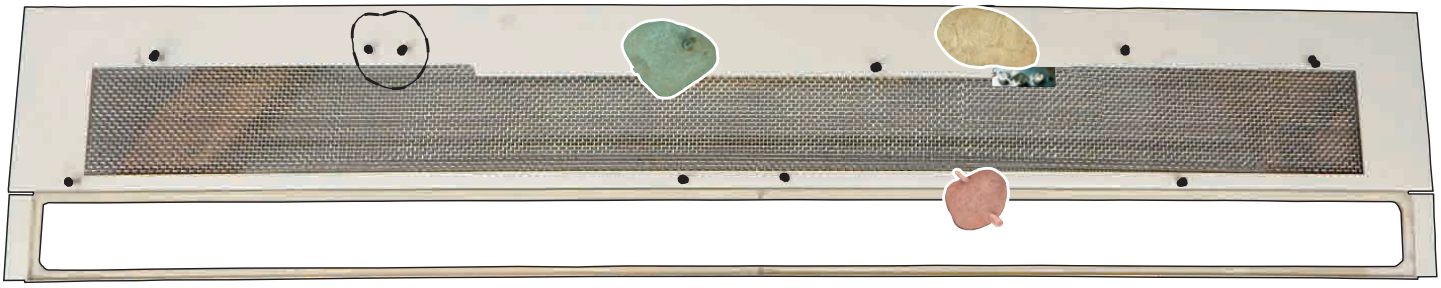

## TOP VIEW

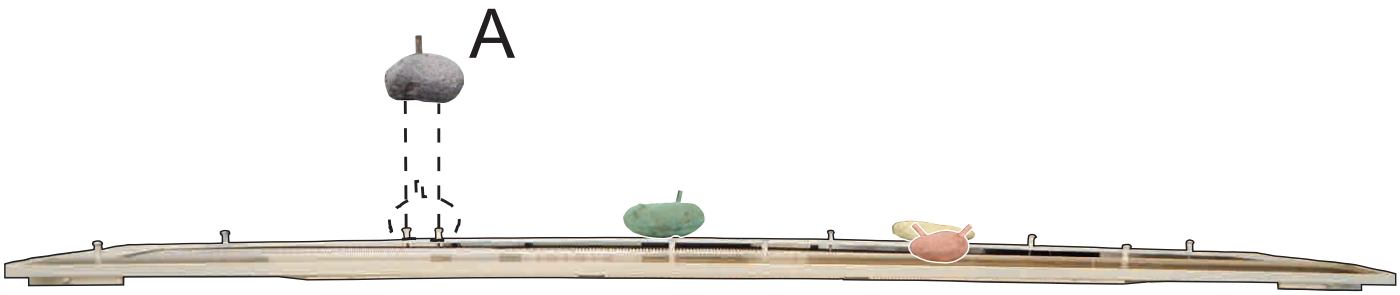


## FRONT VIEW

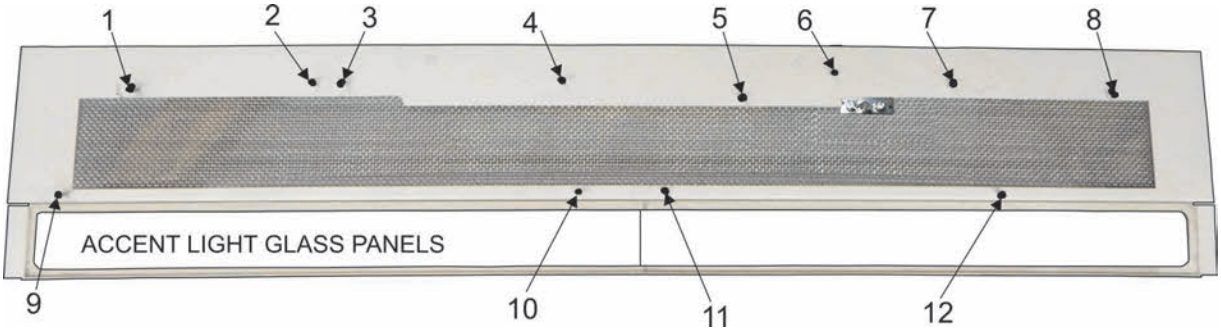


**BURNER PIN LOCATIONS**

# ROCK AND LOG PLACEMENT - DVLL60BP MODELS

5. Place **"Rock F"** on the Accent Light Glass panel so the pin is approximately 11 inches from the left side liner. This rock may be adjusted later to position **"Log Q".**

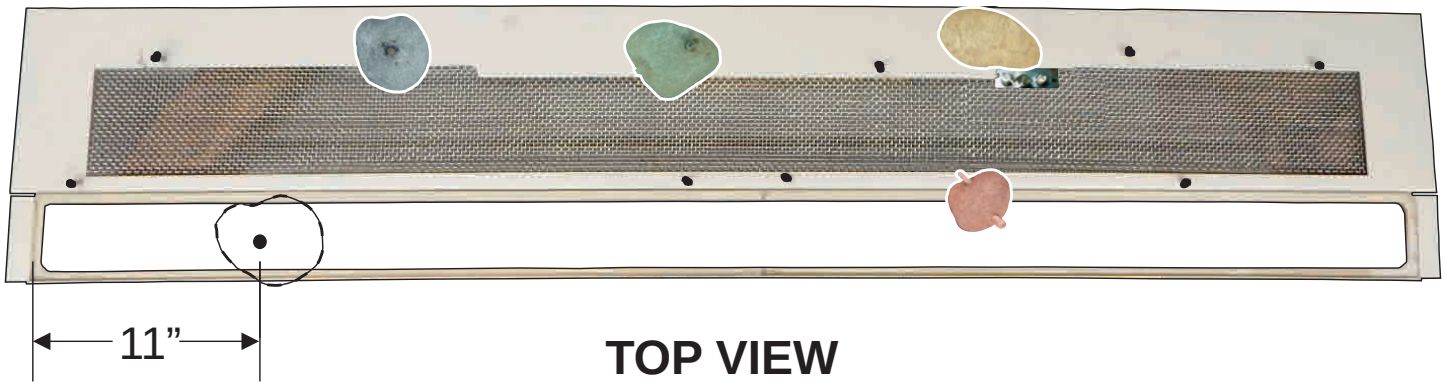


**TOP VIEW**

**FRONT VIEW**

# ROCK AND LOG PLACEMENT - DVLL60BP MODELS

6. Place **"Rock J"** onto **Burner Pin #12.** This rock may be adjusted later to position **"Rock K".**

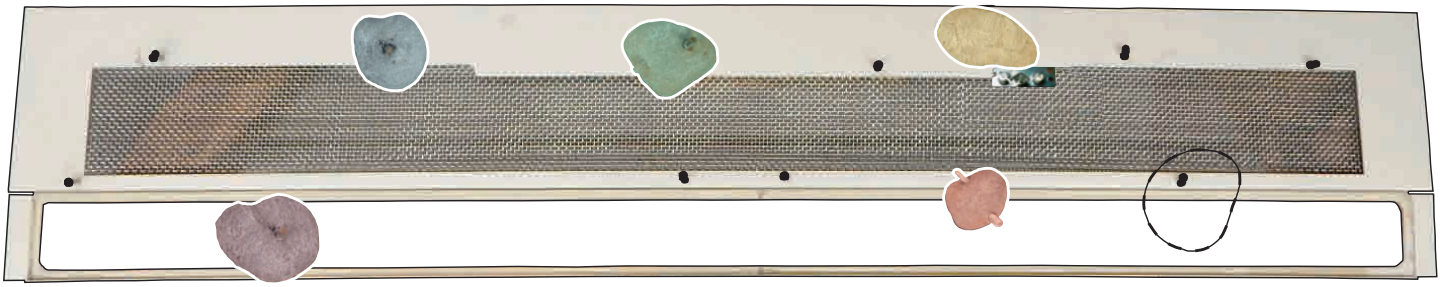

## TOP VIEW

## FRONT VIEW

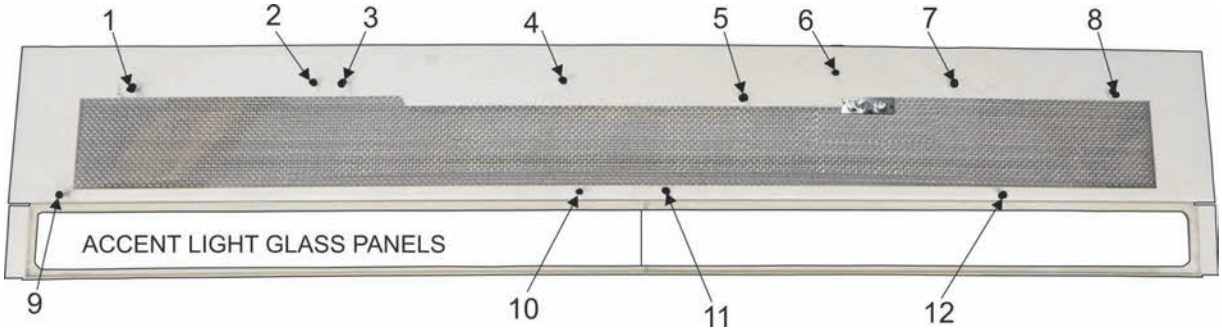


**BURNER PIN LOCATIONS**

# ROCK AND LOG PLACEMENT - DVLL60BP MODELS

7. Place **"Rock E"** on **Burner Pin #7.** The pin on the rock must be on the right side.

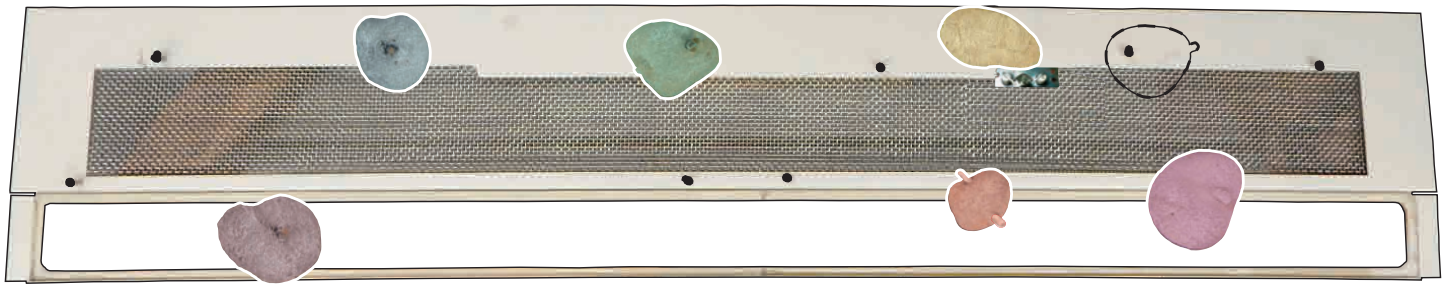

**TOP VIEW**

**FRONT VIEW**

# ROCK AND LOG PLACEMENT - DVLL60BP MODELS

8. Place **"Rock K"** onto the projection on **"Rock J".** These two rocks must be placed so they are away from the burner as shown.

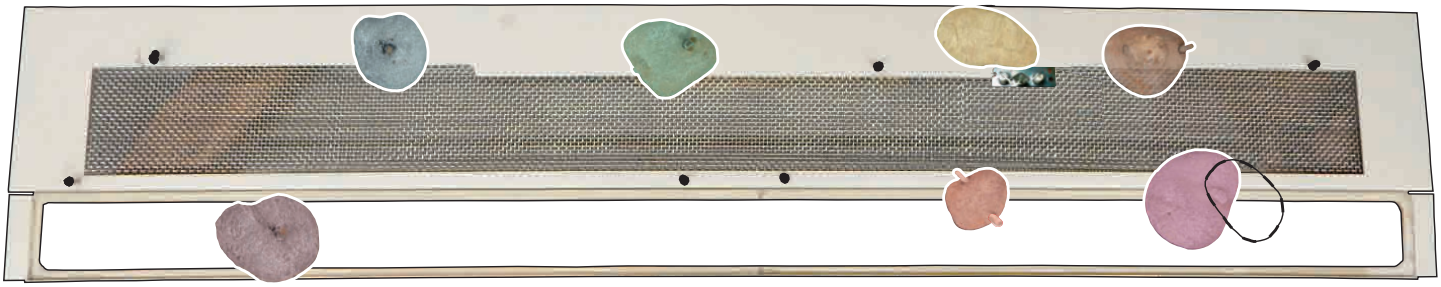

## TOP VIEW

## FRONT VIEW

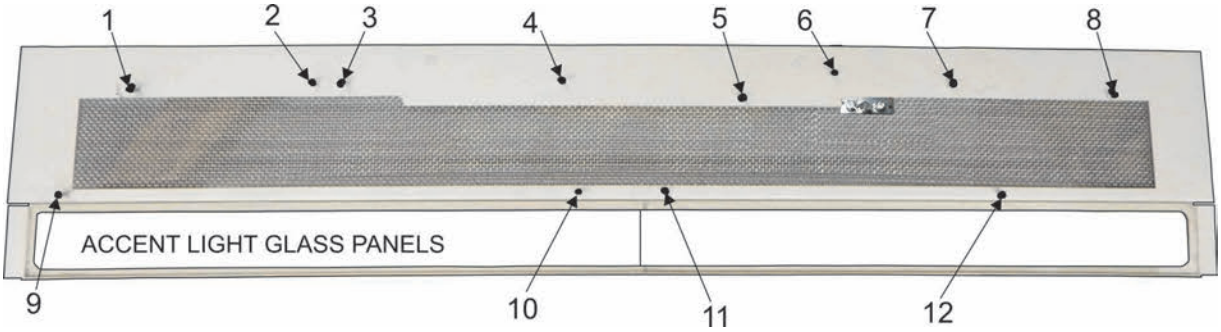


**BURNER PIN LOCATIONS**

# ROCK AND LOG PLACEMENT - DVLL60BP MODELS

9. Place **"Rock G"** onto **Burner Pin #10.** The rock must be placed away from the burner and on top of the **Accent Light Glass Panel.**

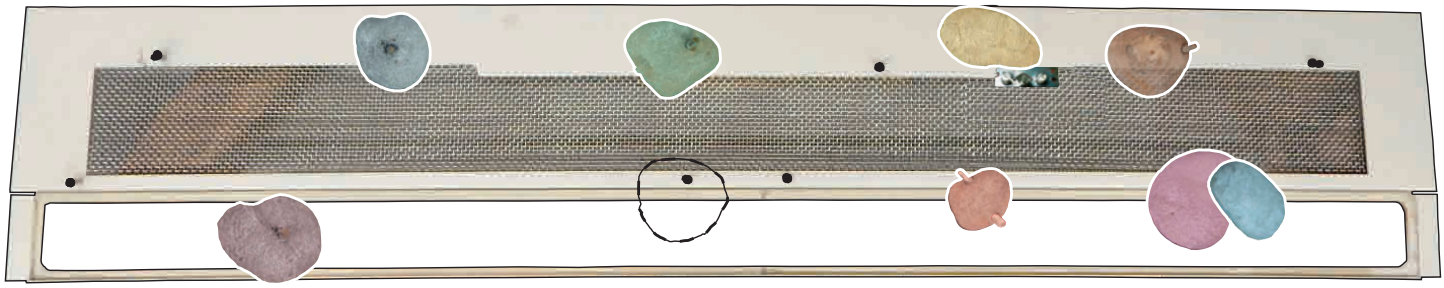

**TOP VIEW**

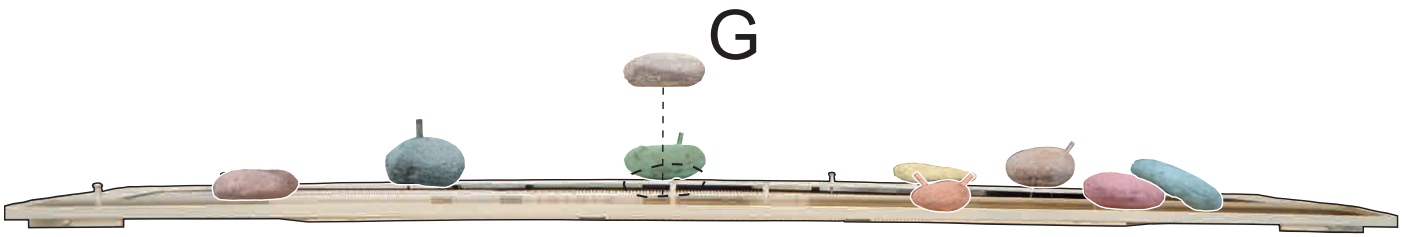


**FRONT VIEW**

# ROCK AND LOG PLACEMENT - DVLL60BP MODELS

10. Place **"Rock I"** over the right side pin on **"Rock H".**

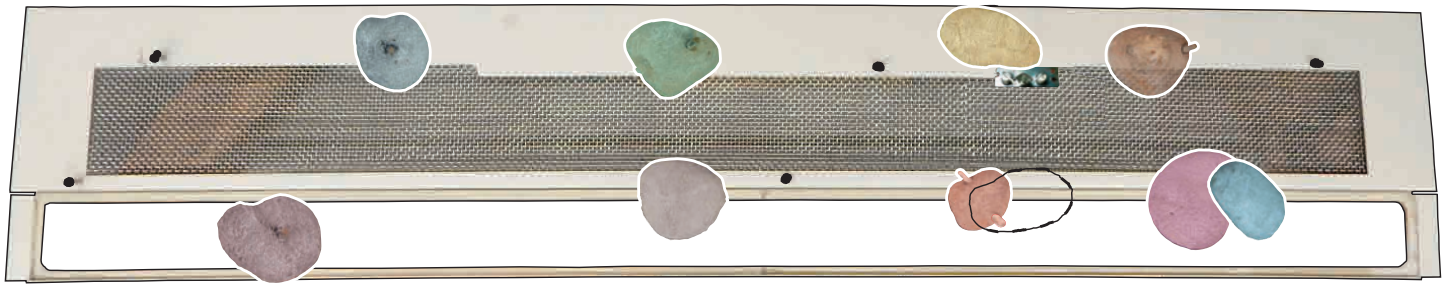

## TOP VIEW

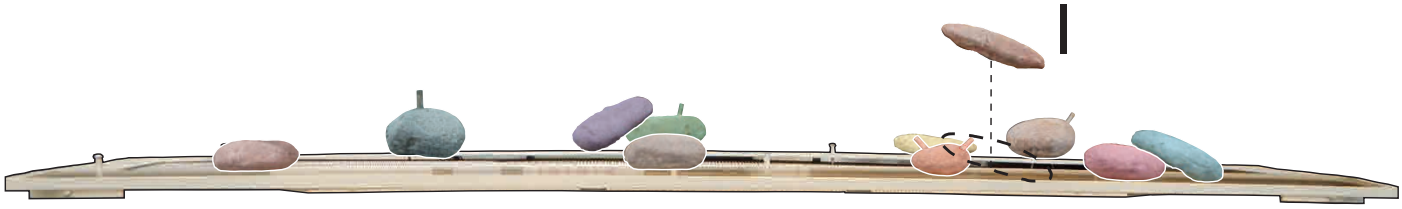


## FRONT VIEW

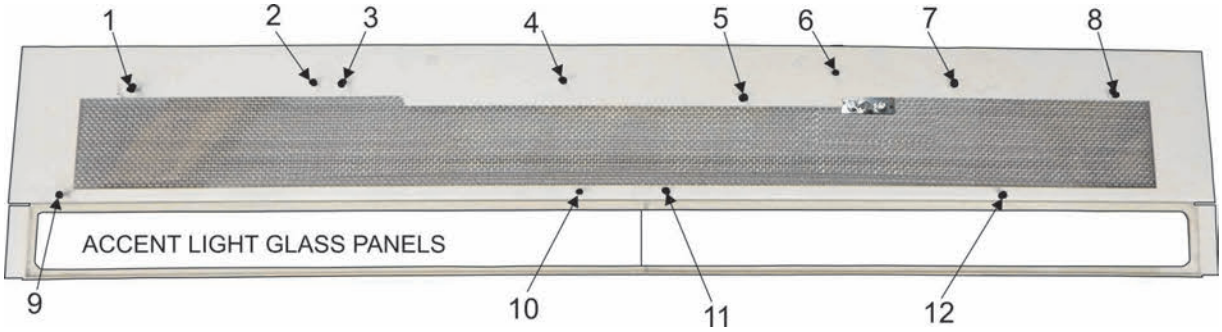


**BURNER PIN LOCATIONS**

# ROCK AND LOG PLACEMENT - DVLL60BP MODELS

11. Place **"Rock B"** onto the pin on the left side of **"Rock C".**

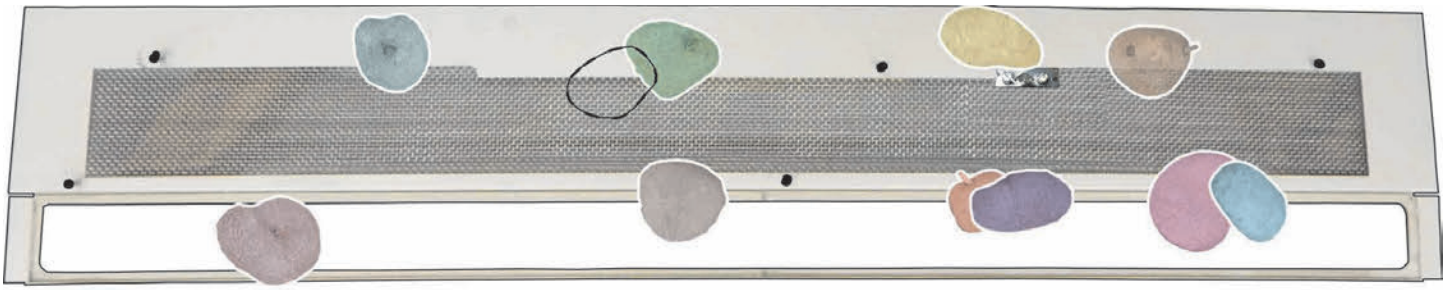

**TOP VIEW**

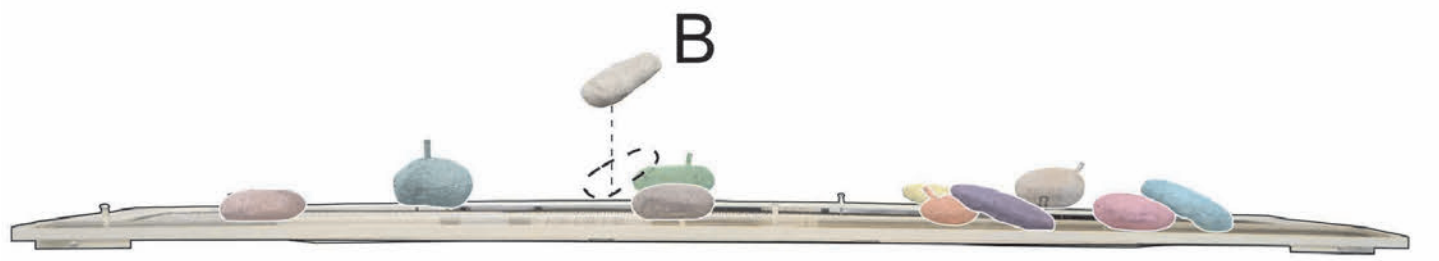


**FRONT VIEW**

# ROCK AND LOG PLACEMENT - DVLL60BP MODELS

12. Place **"LOG O"** onto **Burner Pin #8** and the pin on **"Rock E".**

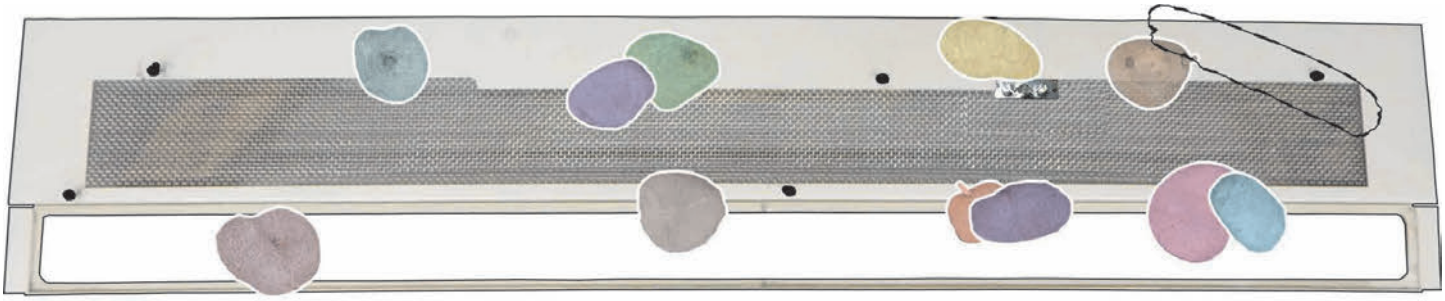

## TOP VIEW

## FRONT VIEW

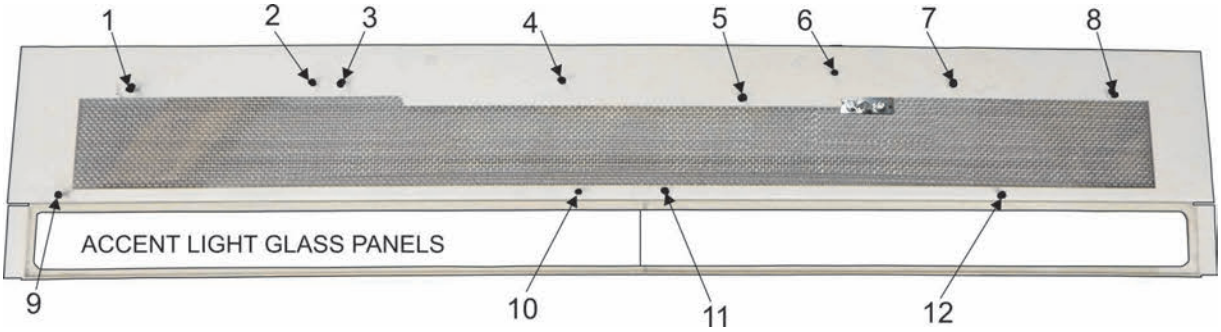


**BURNER PIN LOCATIONS**

# ROCK AND LOG PLACEMENT - DVLL60BP MODELS

13. Place **"LOG P"** onto the pin on **"LOG O".** Angle the log to the right so that it rests on the **Accent Light Glass Panel.**

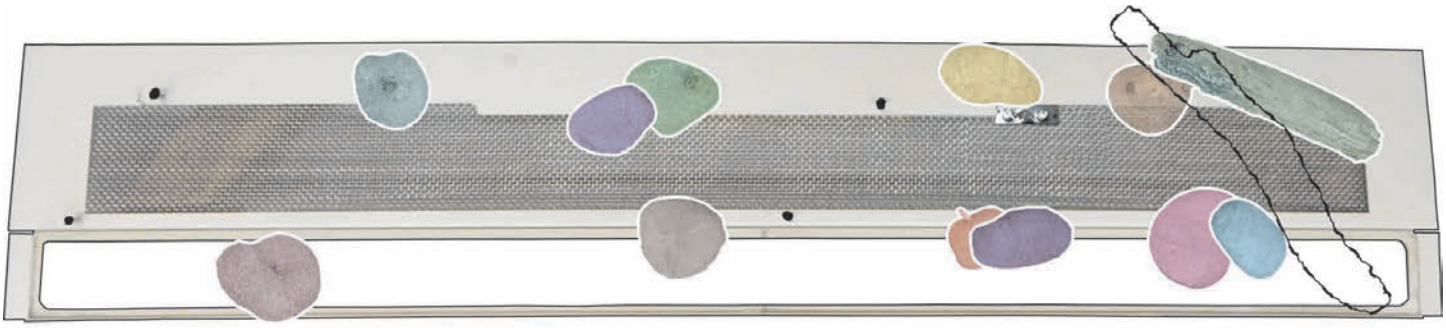

## TOP VIEW

## FRONT VIEW

# ROCK AND LOG PLACEMENT - DVLL60BP MODELS

14. Place **"LOG N"** onto **Burner Pin #5** and the pin on **"ROCK C".**

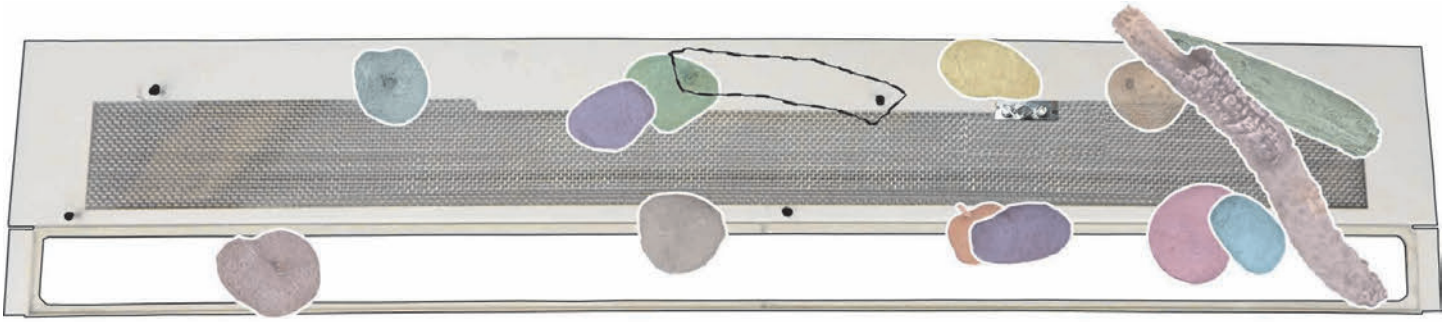

## TOP VIEW

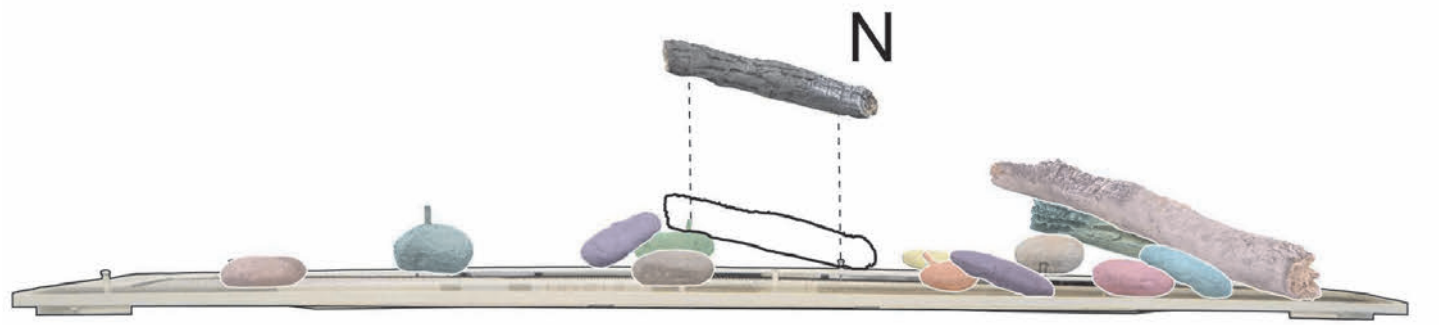


## FRONT VIEW

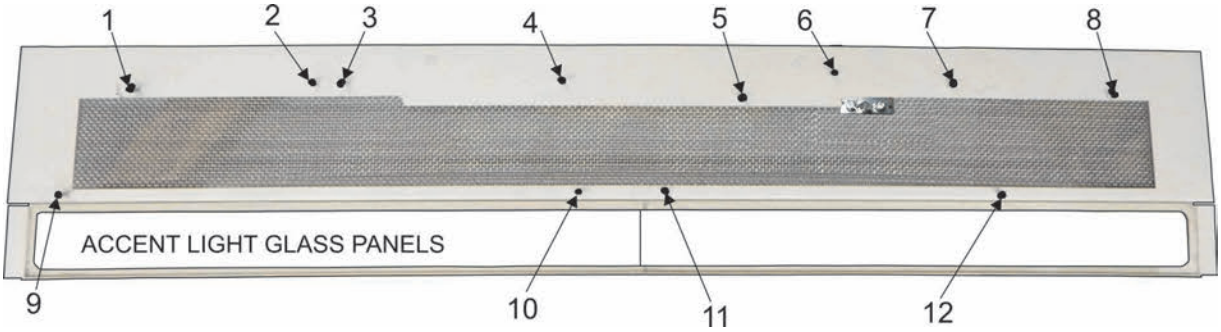


**BURNER PIN LOCATIONS**

# ROCK AND LOG PLACEMENT - DVLL60BP MODELS

15. Place **"Log R"** onto **Burner Pin #11** and onto the pin on **"Rock H".**

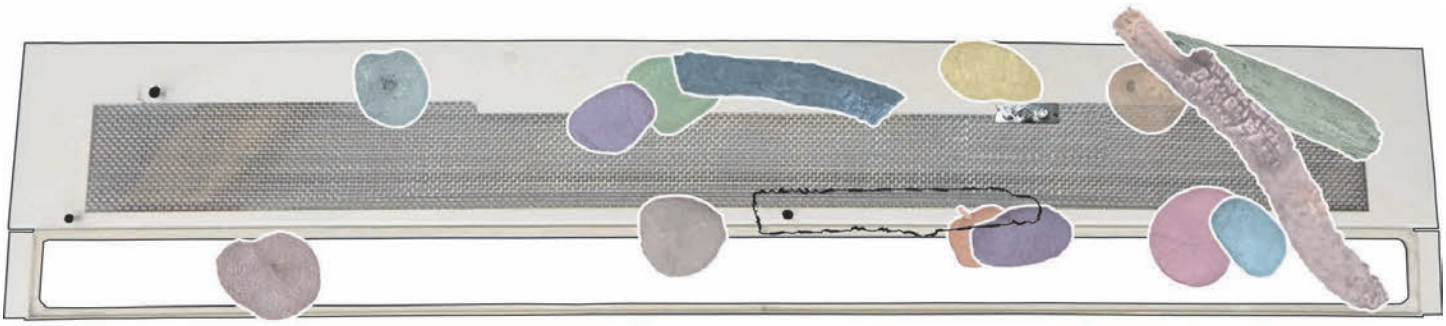

## TOP VIEW

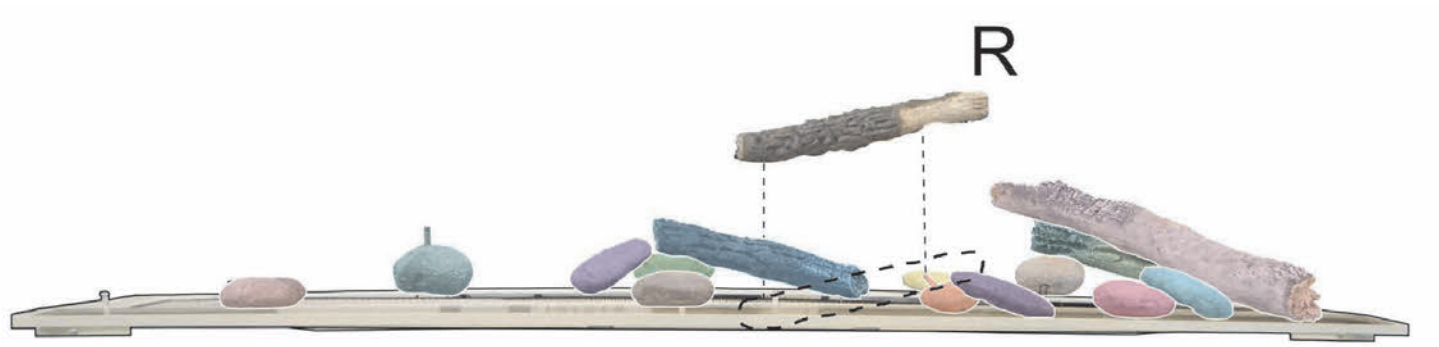


## FRONT VIEW

# ROCK AND LOG PLACEMENT - DVLL60BP MODELS

16. Place **"Log Q"** onto **Burner Pin #9** and the pin on **"Rock F".**

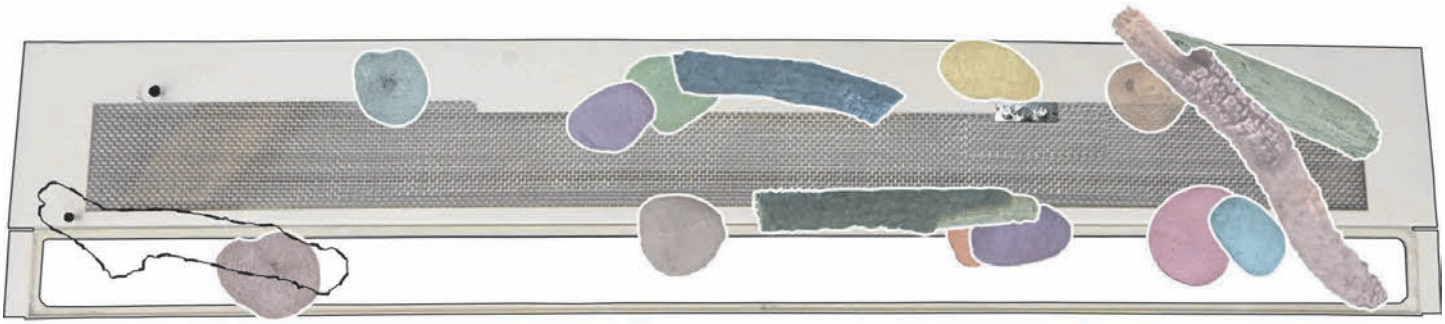

## TOP VIEW

## FRONT VIEW

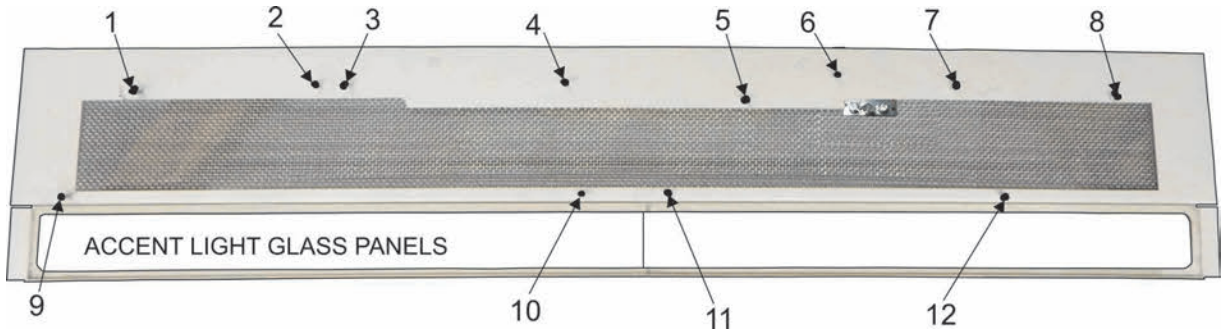


**BURNER PIN LOCATIONS**

# ROCK AND LOG PLACEMENT - DVLL60BP MODELS

17. Place **"Log L"** onto **Burner Pin #1** and the pin on **"Rock A".**

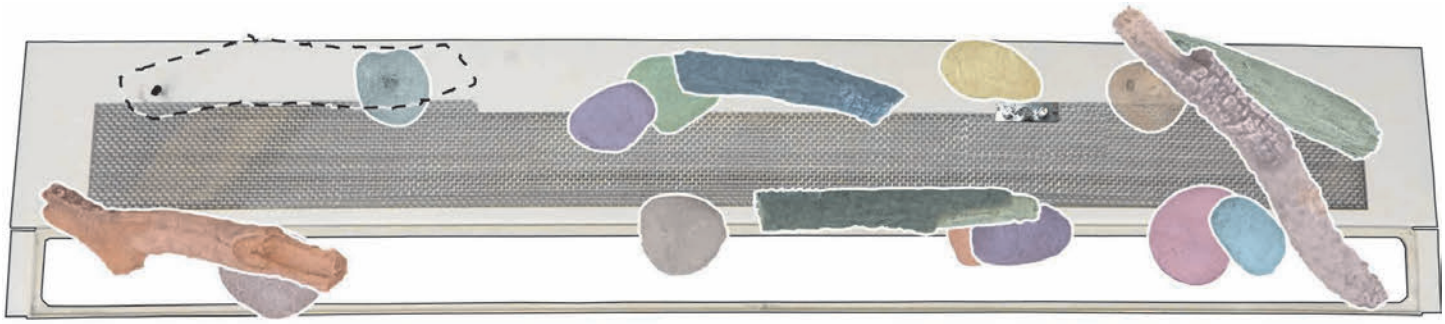

## TOP VIEW

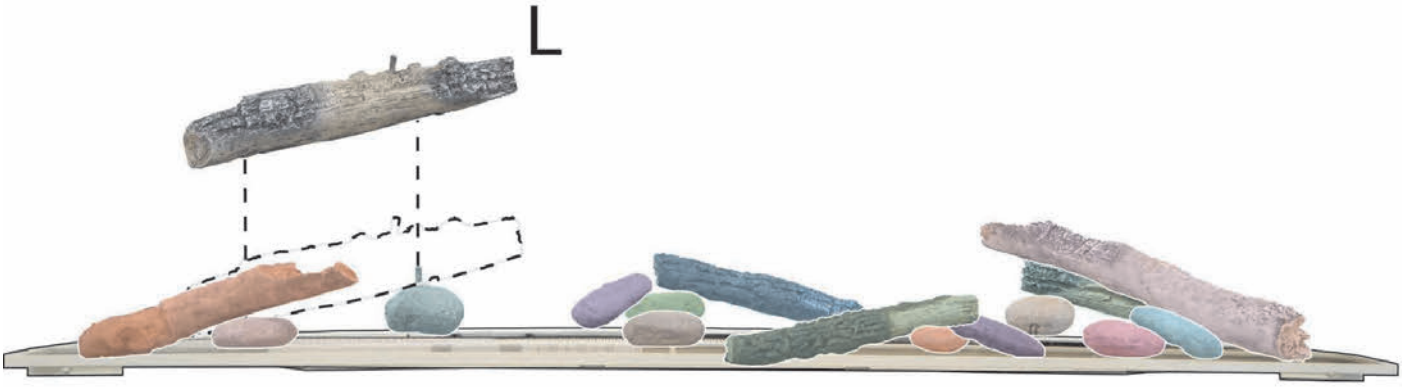


## FRONT VIEW

# ROCK AND LOG PLACEMENT - DVLL60BP MODELS

18. Place **"Log M"** onto the pin on **"Log L".** Angle the log to the right so that it rests on the **Accent Light Glass Panel.**

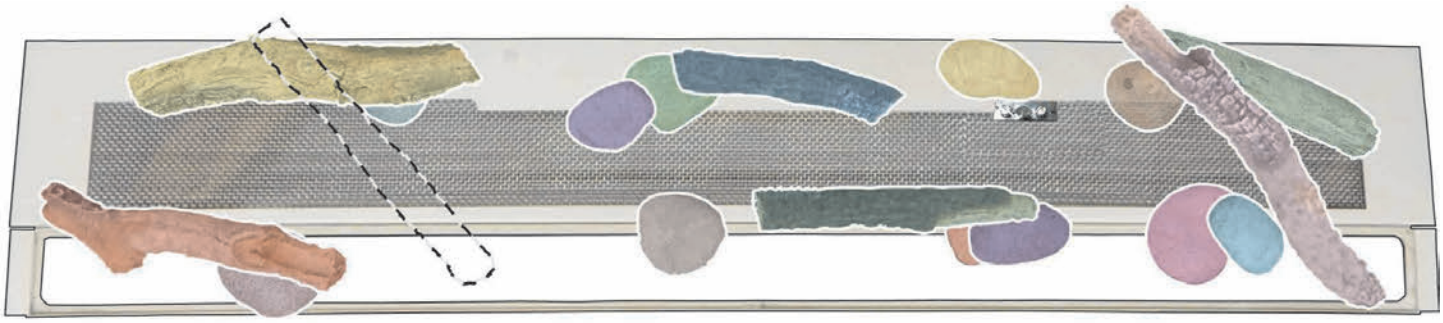

## TOP VIEW

## FRONT VIEW

# ROCK AND LOG PLACEMENT - DVLL60BP MODELS

19. Log Set assembly is complete.

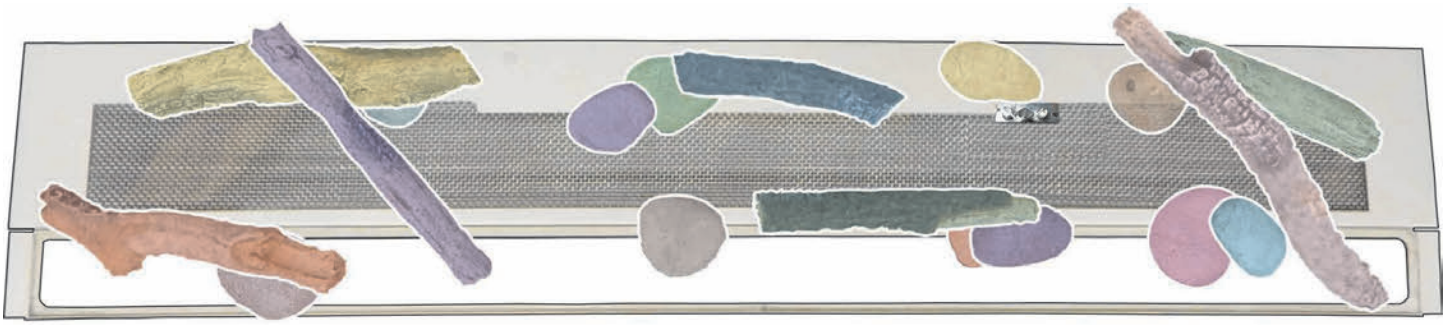

**TOP VIEW**

**FRONT VIEW**

# COMPLETING INSTALLATION - DVLL60BP MODELS

**Crushed Glass Media**

1. Add the decorative crushed glass media of your choice at this time. Crushed glass may cover the complete burner cover, accent glass panels, and burner screen.
2. Place crushed media over the burner in a single layer. Use just enough crushed glass media to mask the burner screen (approximately 1 Sq. Ft.). Additional crushed glass may be placed over the burner cover and accent light glass panels.

   **Glass Quantity:**
   **DVLL60BP:** Use up to 7 Sq. Ft. of 1/4-inch crushed glass.

***NOTICE:*** Crushed glass should not be placed on the burner screen area more than one layer deep. Excessive use of crushed glass may create a greater chance of developing soot on logs. Do not allow crushed glass to restrict the pilot flame. Do not place crushed glass in the pilot bracket area.

**Optional Stainless Steel Coils**

Place the coils inside the fireplace. DO NOT place the coils in a location where they will come into contact with flame. If coils come in contact with flame, sooting may occur.

***NOTICE:*** Placement of coils near flame will cause the metal coil to discolor with shades of blue or brown. However, does not effect the performance of the fireplace.

**Final Steps**

1. Re-install the glass door assembly. Test fire to ensure there is minimal contact between the flame and the logs, rocks and curls.
2. If the test fire is acceptable, re-install the barrier screen assembly.
3. If during the test firing there seems to be significant flame impingement on the cross logs, there are two steps that can be taken to reduce the impingement:
   a. Pivot log left or right to move away from flame.
   b. Thin out crushed glass directly under the cross log. This can reduce the height of the flame directly under the log.

# ROCK AND LOG PLACEMENT - DVLL72BP MODELS

**Tools Needed:**

- Protective Gloves
- Phillips Screw Driver or Power Drill with Phillips Drive

Before you begin: Do not, handle these logs with your bare hands! Always wear gloves to prevent skin irritation. After handling logs, wash your hands gently with soap and water.

**All Logs**

The positioning of the logs is critical to the safe and clean operation of this heater. Sooting and other problems may result if the logs are not properly and firmly positioned in the appliance.
**Refer to Figure 9 for the following warning.**

| ⚠ WARNING |
|---|
| **Failure to position the parts in accordance with this diagram or failure to use only parts specifically approved with this appliance may result in property damage or personal injury.** |

**Attention:** Refer to Pages 4 and 5 Parts List and Parts View to order logs or rocks.

***NOTICE:*** Once the installation is complete with the logs, rocks, and crushed glass media in place, operate the fireplace to verify flame appearance. If there are flames directly impinging a log, turn off fireplace, then remove the crushed glass media directly below where the flame impingement occurred. This should eliminate sooting on the log, and provide a more pleasing flame appearance.

**Installation of the Pins for Log and Rock Placement**

The LS60THF Log and Rock kit includes twelve 8-32 x 3/4" long self-threading screws, and twelve 9/16" long spacers. Only (9) screws and spacers are used with the DVLL72BP fireplace, prior to the log and rock placement.

***NOTICE:*** It is highly recommended that the fireplace liner be installed prior to installing the log and rock spacers so interference with the locator pins is avoided.

Use a standard Phillips screwdriver or power drill with a Phillips drive to install the screws through a spacer at each of the nine pilot hole locations provided in the burner cover. **See Figure 10.** These will be the locator pins for the logs and rocks.

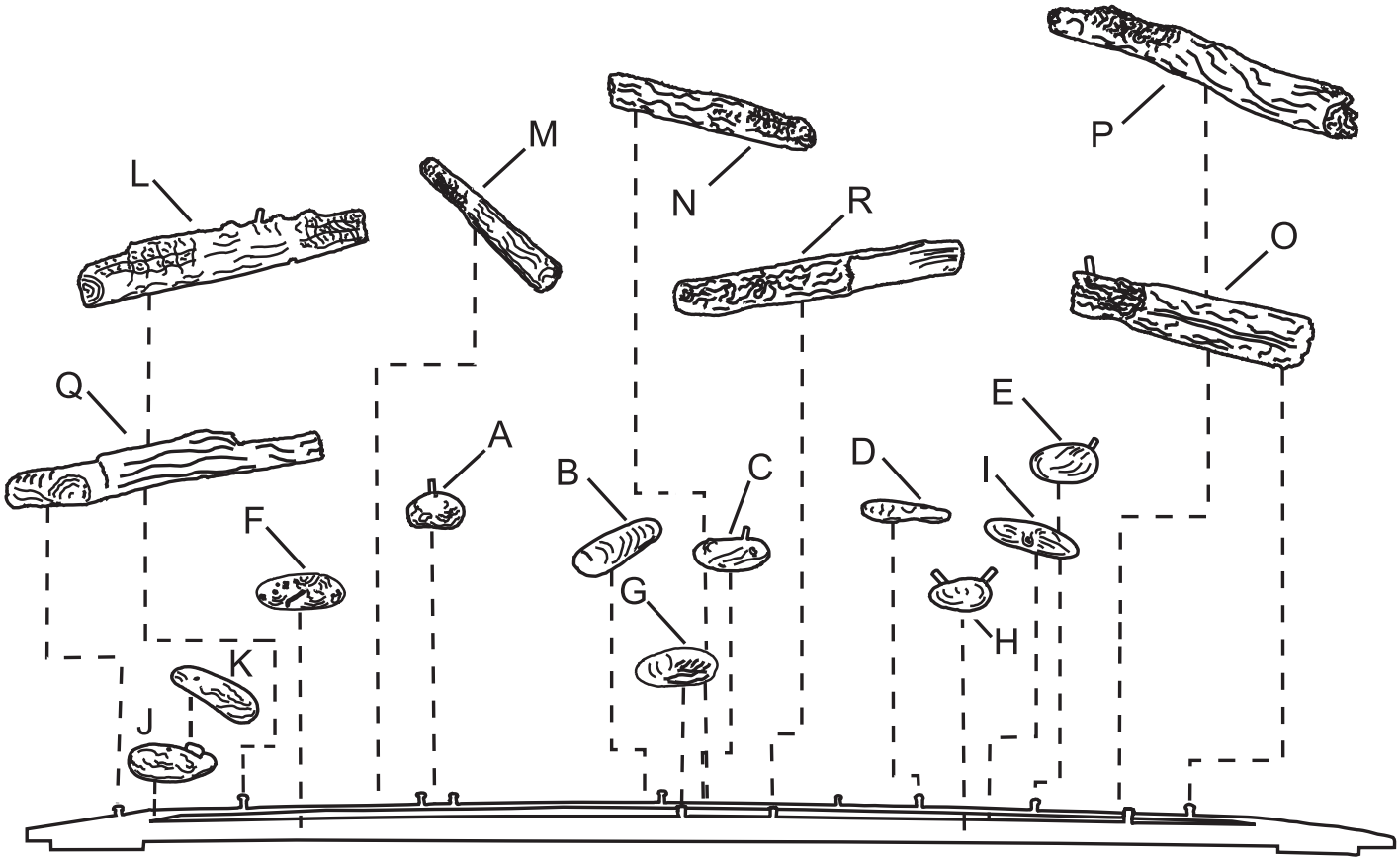


**Rock and Log Placement - Figure 9**

# ROCK AND LOG PLACEMENT - DVLL72BP MODELS

1. Place **"Rock J"** on to locator pin # 1.

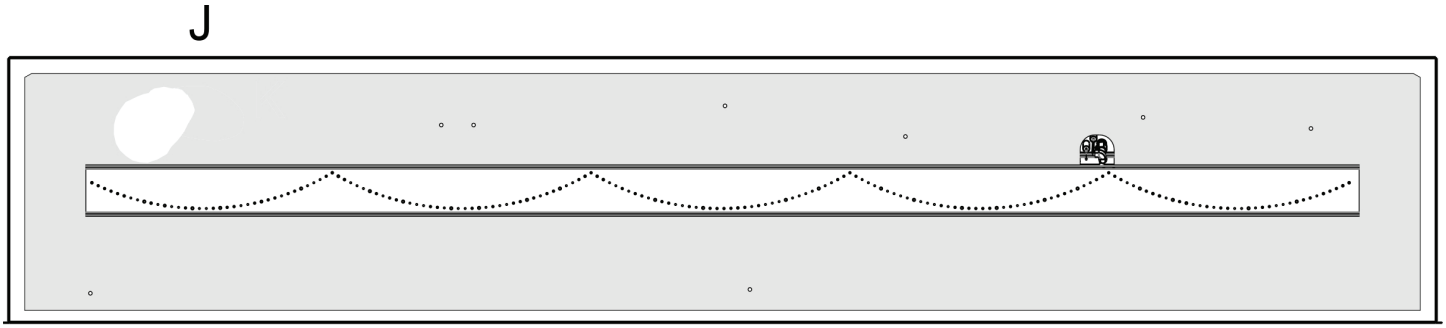


## TOP VIEW

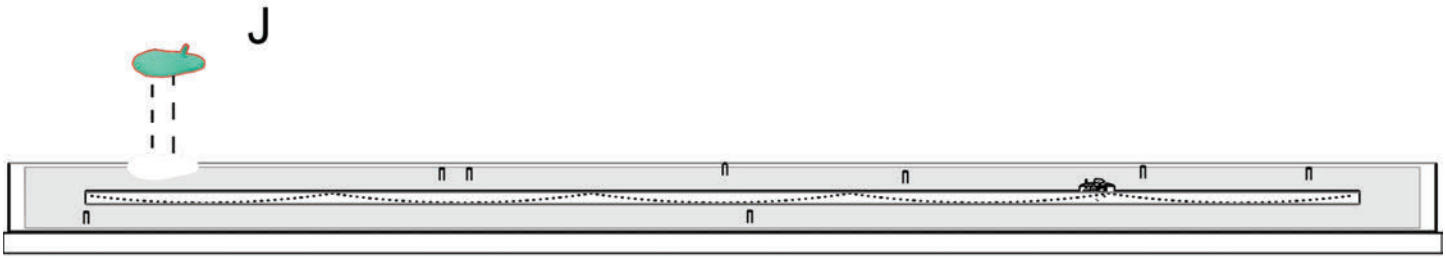


## FRONT VIEW

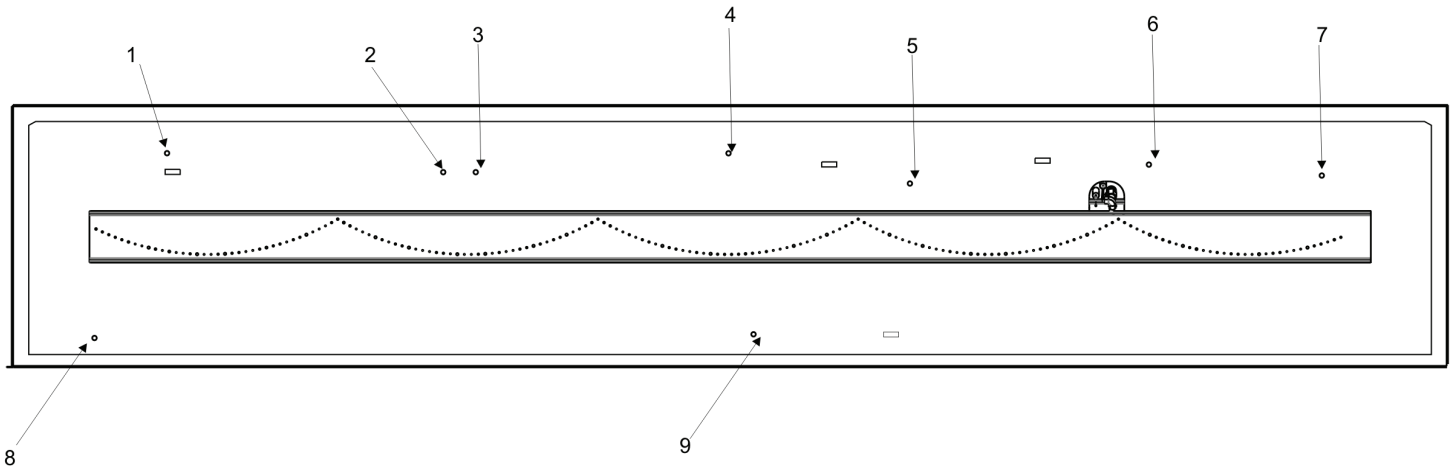


**BURNER PIN LOCATIONS - Figure 10**

# ROCK AND LOG PLACEMENT - DVLL72BP MODELS

2. Place **"Rock K"** on top of **"Rock J".** A pin locator is provided on **Rock J** to position **Rock K.**

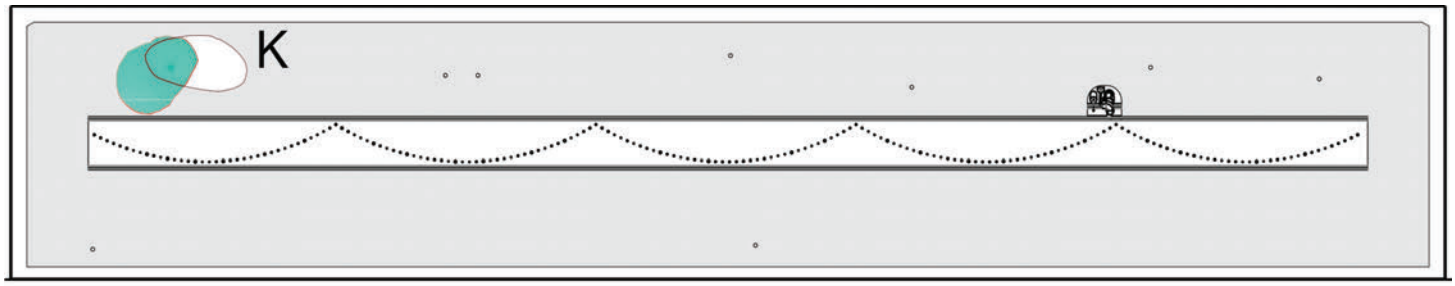


## TOP VIEW

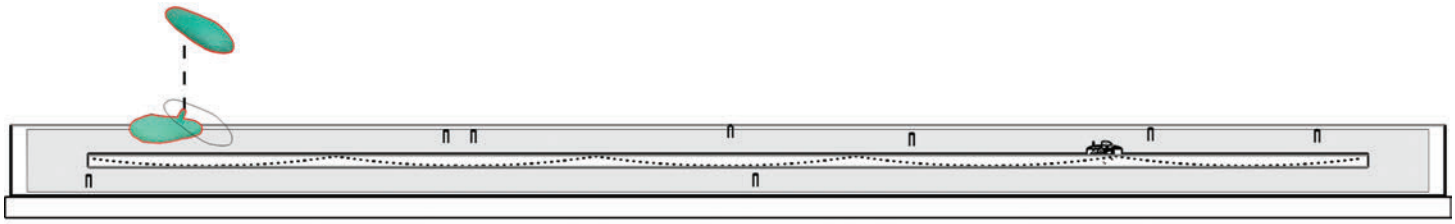

## FRONT VIEW

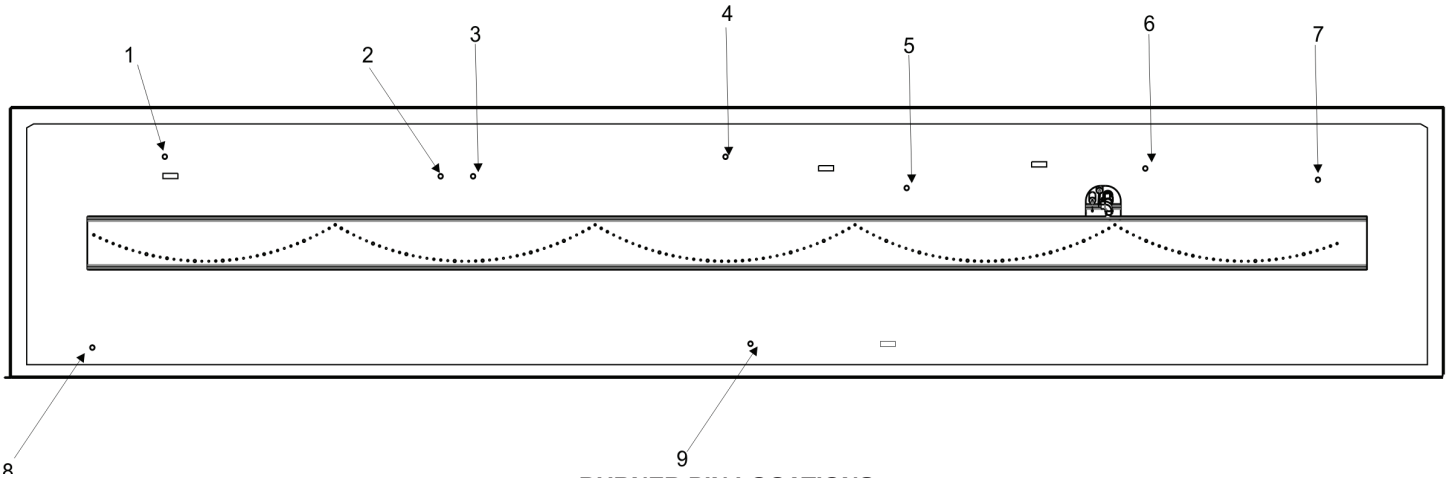


**BURNER PIN LOCATIONS**

# ROCK AND LOG PLACEMENT - DVLL72BP MODELS

3. Place **"Rock A"** on the two locator pins # 2 and # 3.

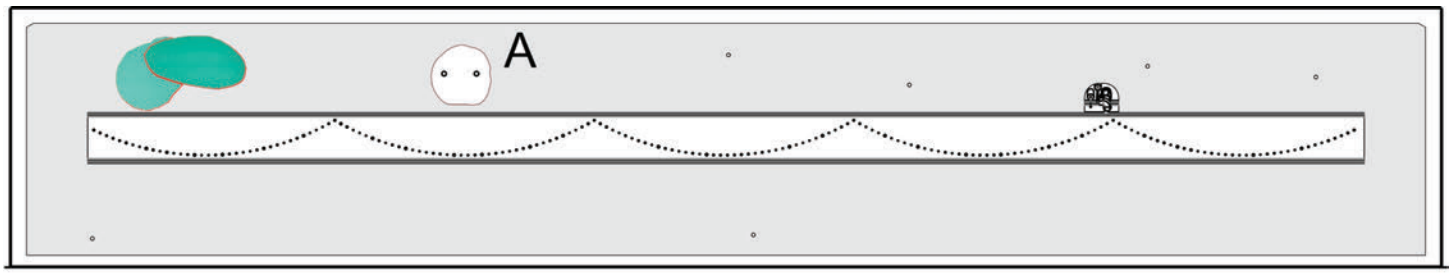


## TOP VIEW

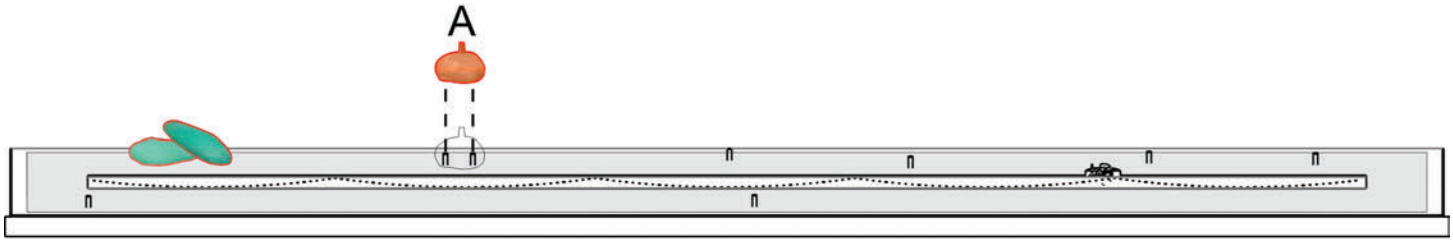


## FRONT VIEW

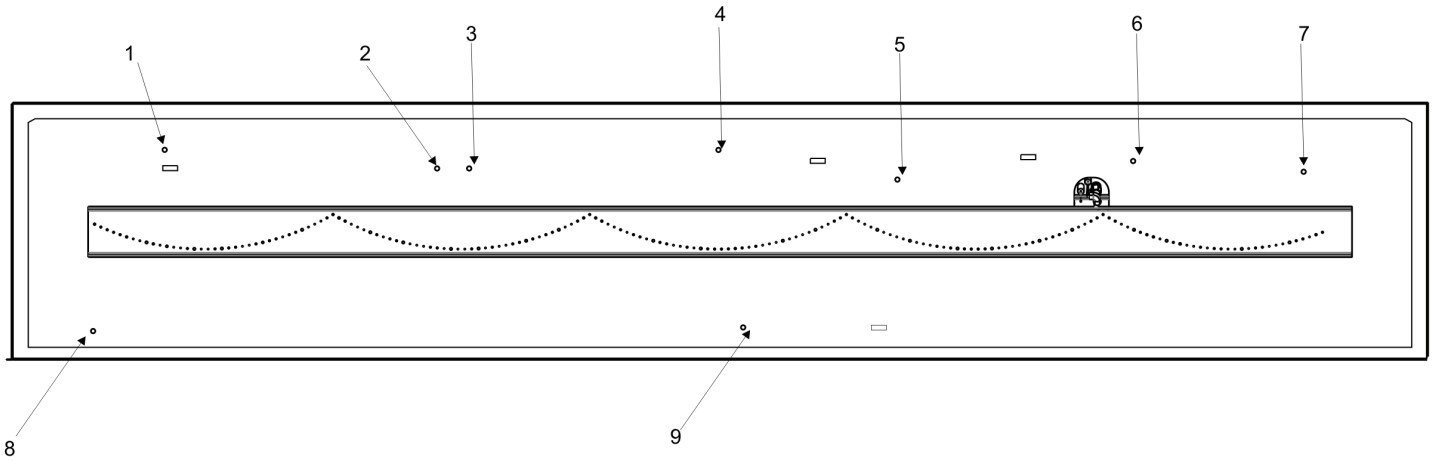


**BURNER PIN LOCATIONS**

# ROCK AND LOG PLACEMENT - DVLL72BP MODELS

4. Place **"Rock C"** on the locator pin # 4 that is closest to the center of the fireplace, behind the burner. Rotate **Rock C** so the embedded pin is positioned to the right.

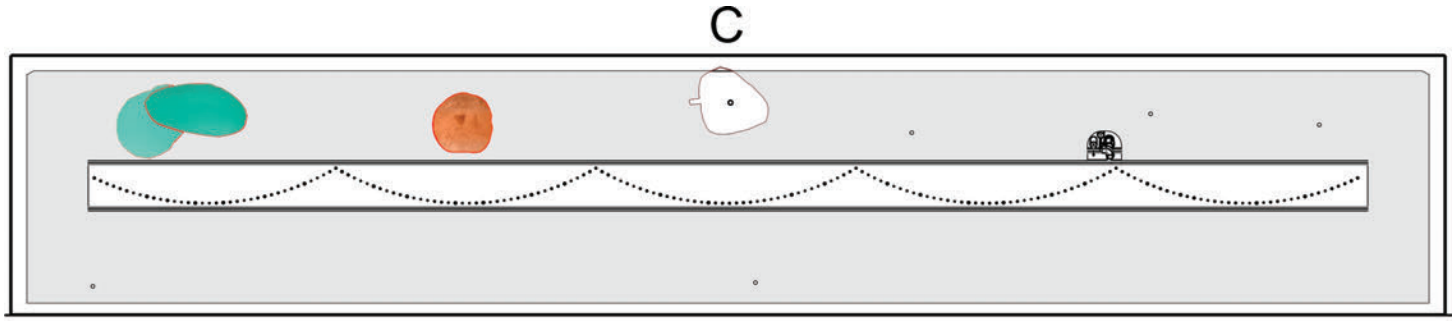


## TOP VIEW

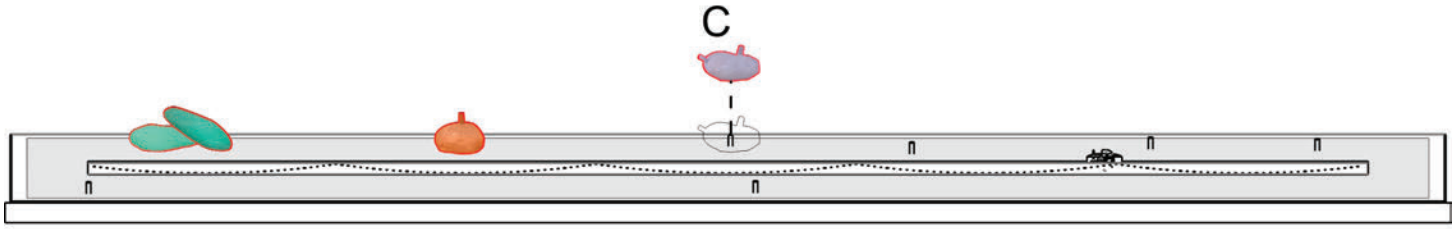


## FRONT VIEW

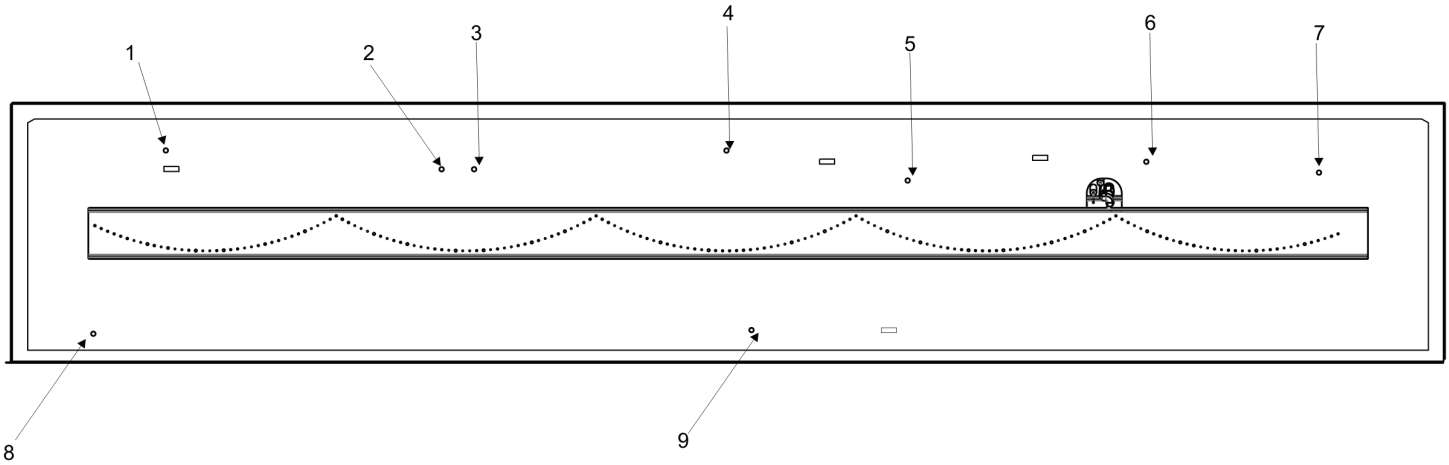


**BURNER PIN LOCATIONS**

# ROCK AND LOG PLACEMENT - DVLL72BP MODELS

5. Set **"Rock B"** onto the left hand projection provided on **Rock C.**

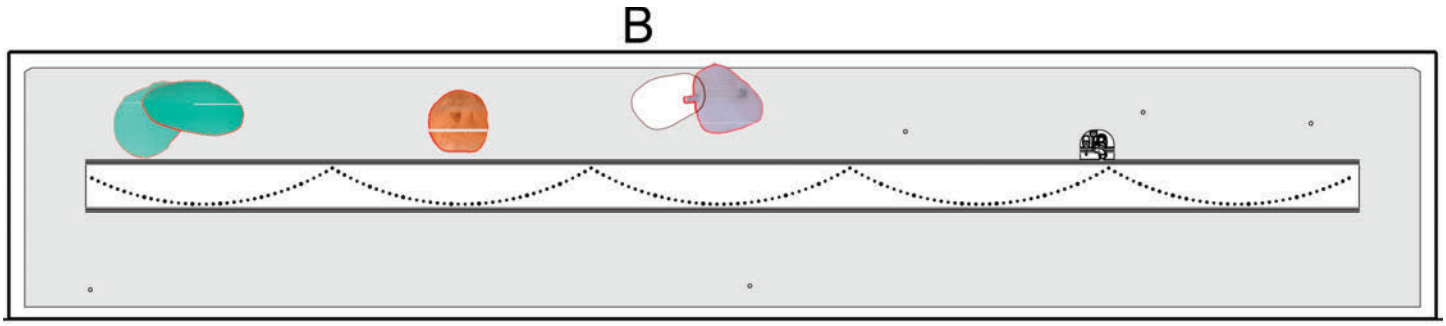


## TOP VIEW

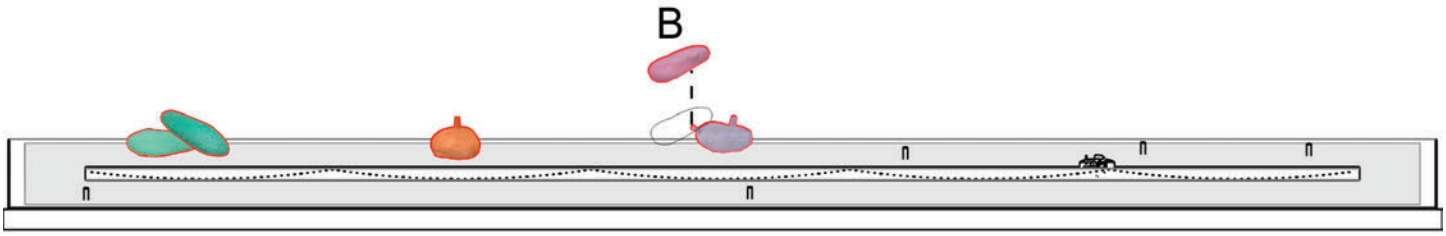


## FRONT VIEW

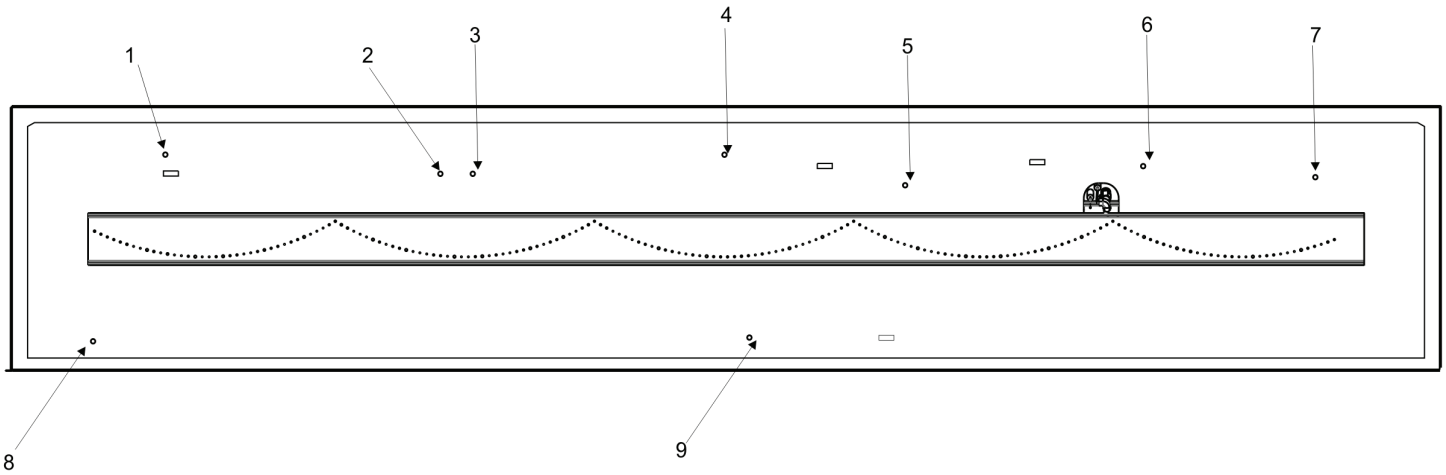


**BURNER PIN LOCATIONS**

# ROCK AND LOG PLACEMENT - DVLL72BP MODELS

6. Place **"Rock D"** just behind the burner and to the left of the pilot cutout in the burner screen as indicated.

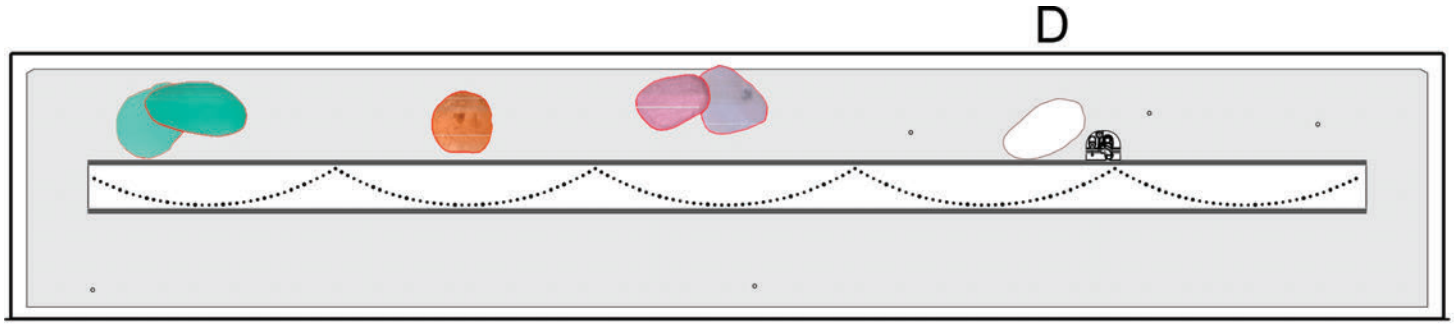


## TOP VIEW

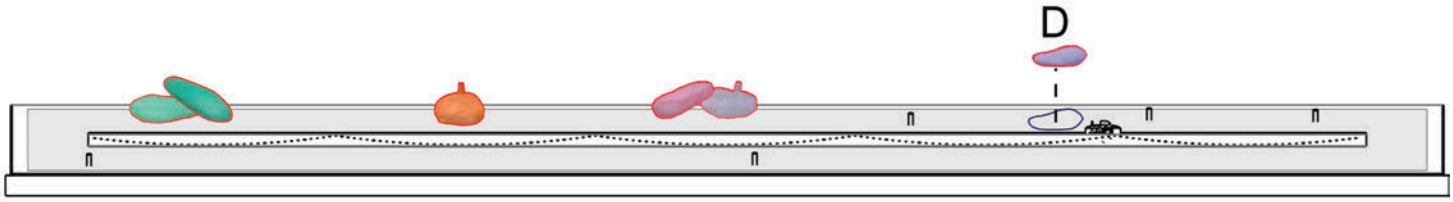


## FRONT VIEW

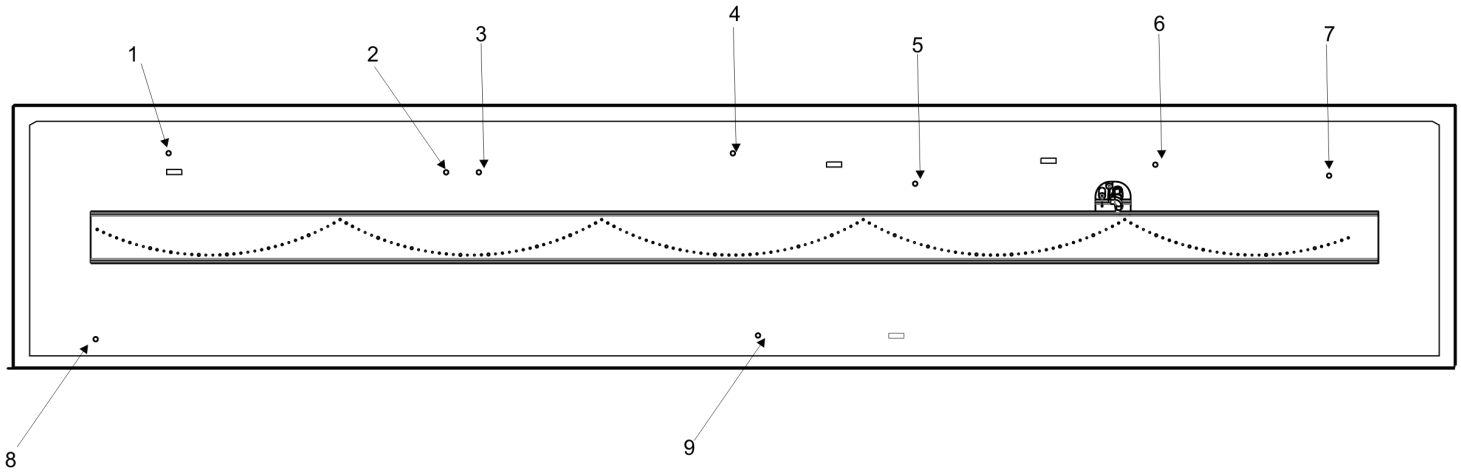


**BURNER PIN LOCATIONS**

# ROCK AND LOG PLACEMENT - DVLL72BP MODELS

7. Place **"Rock E"** on pin # 6 just to the right of the pilot cutout.

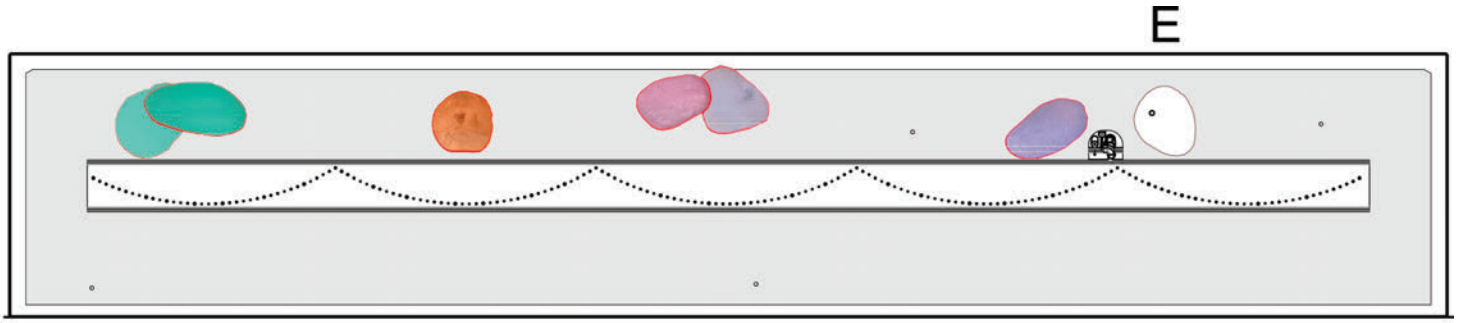


## TOP VIEW

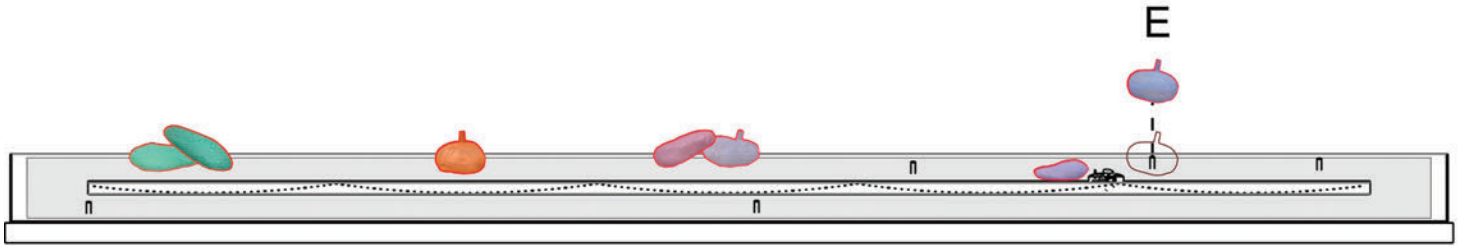


## FRONT VIEW

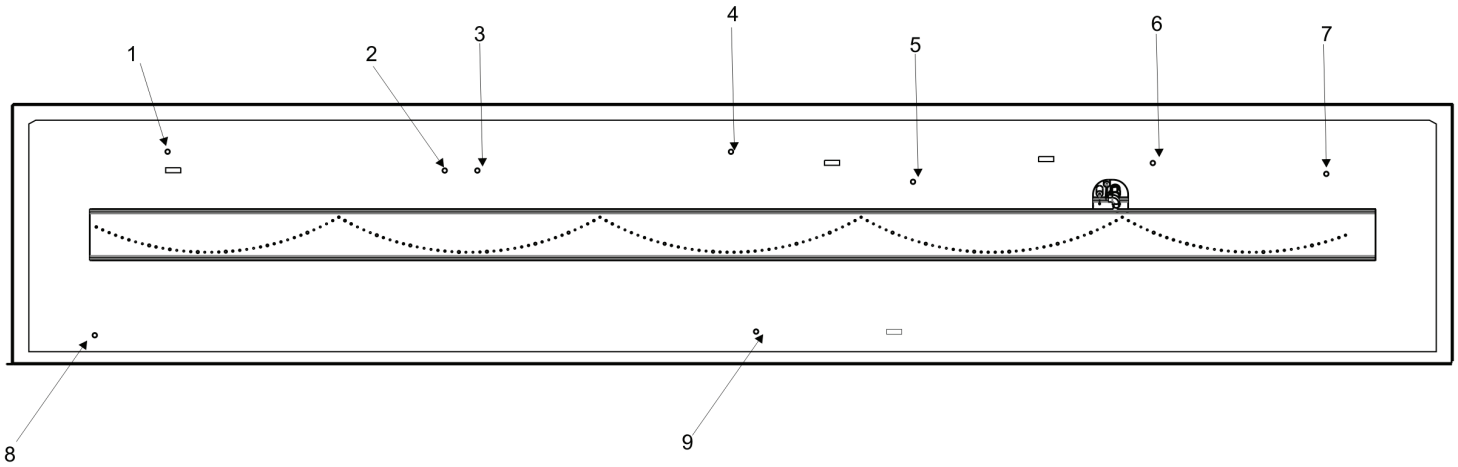


**BURNER PIN LOCATIONS**

# ROCK AND LOG PLACEMENT - DVLL72BP MODELS

8. Place **"Rock F"** on the burner screen in the approximate position shown in the Top View illustration. It will be shifted later in step 17 to match up with **Log Q** positioning.

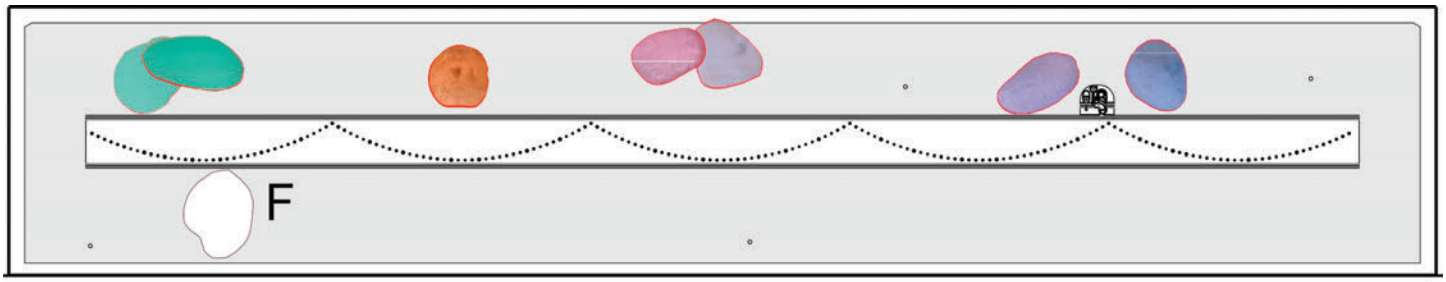


## TOP VIEW

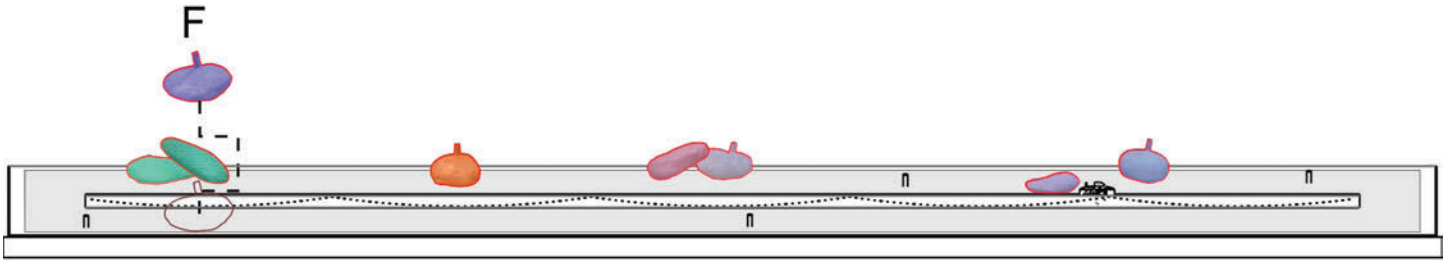


## FRONT VIEW

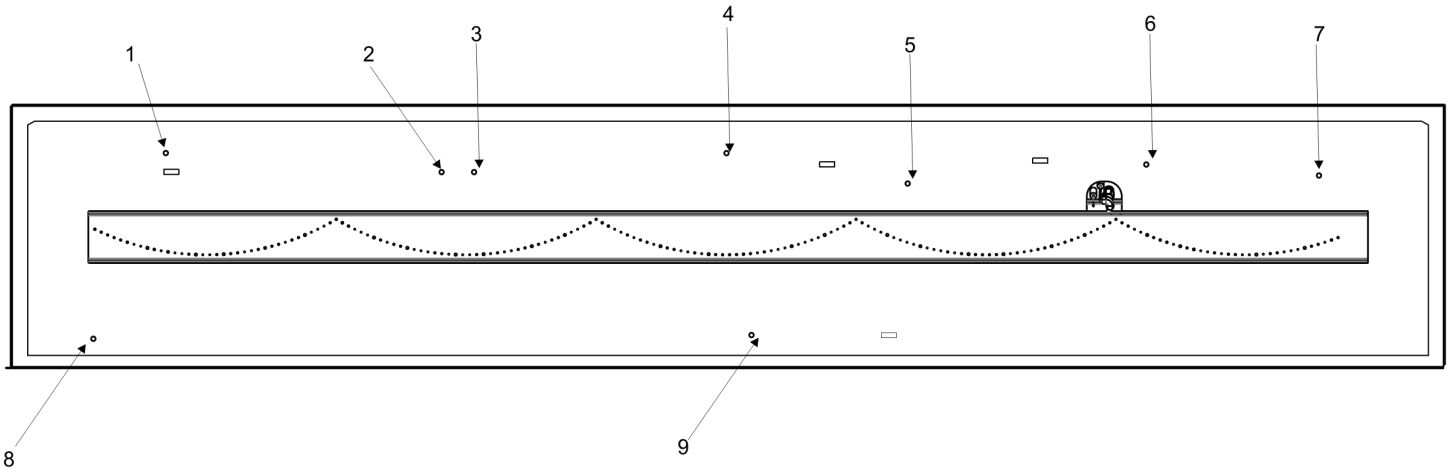


**BURNER PIN LOCATIONS**

# ROCK AND LOG PLACEMENT - DVLL72BP MODELS

9. Place **"Rock G"** on pin # 9 at the front center of the burner screen. Position the rock so the embedded pin is to angled to the right.

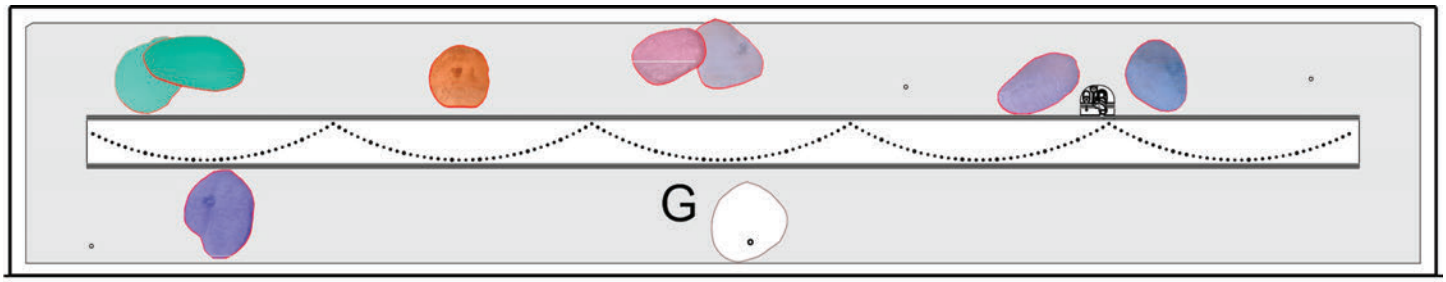


## TOP VIEW

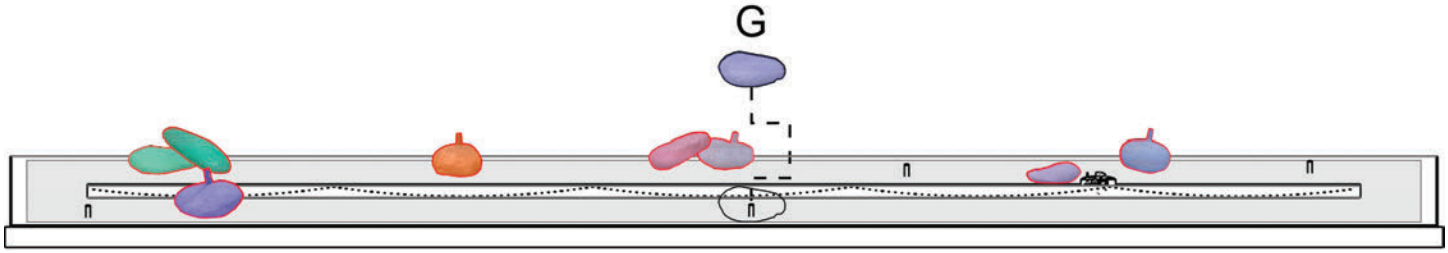


## FRONT VIEW

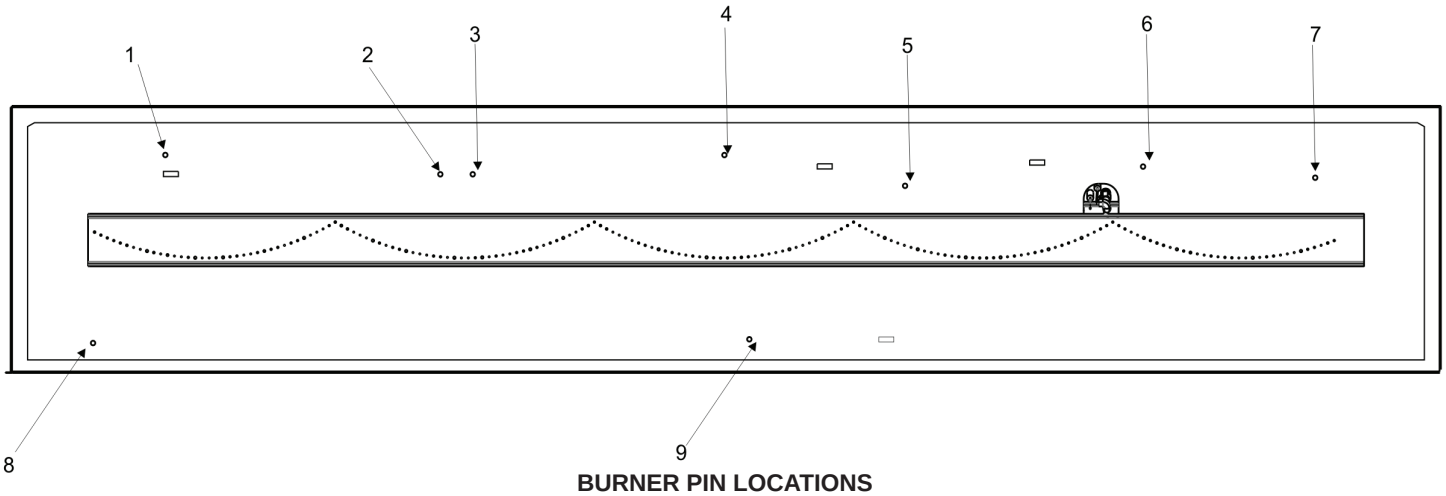


**BURNER PIN LOCATIONS**

# ROCK AND LOG PLACEMENT - DVLL72BP MODELS

10. Place **"Rock H"** on the burner screen in front of the burner. This rock will be located so the embedded pins are angled to the right and left. This rock will be in line with **Rock D** as shown in the Top View illustration.

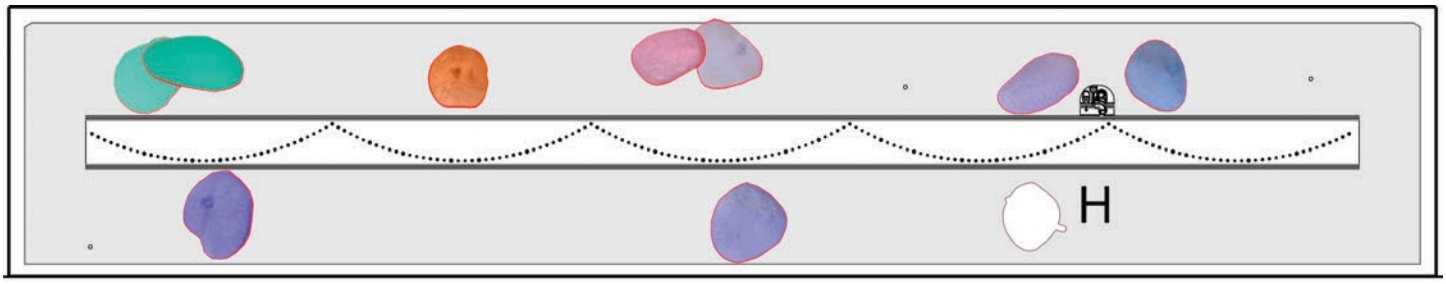


## TOP VIEW

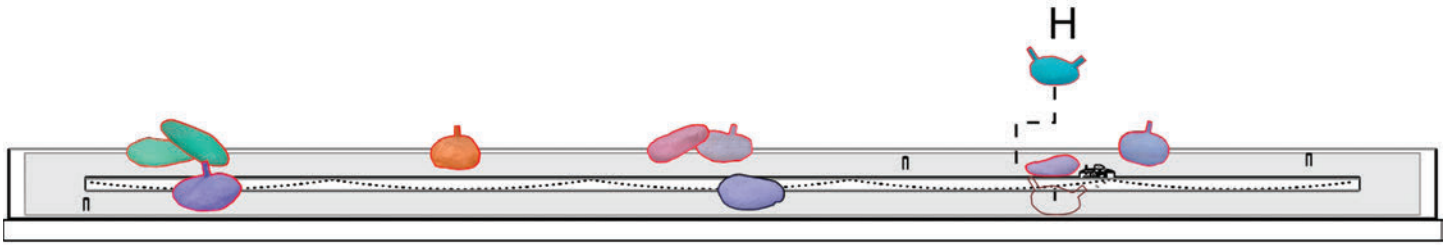


## FRONT VIEW

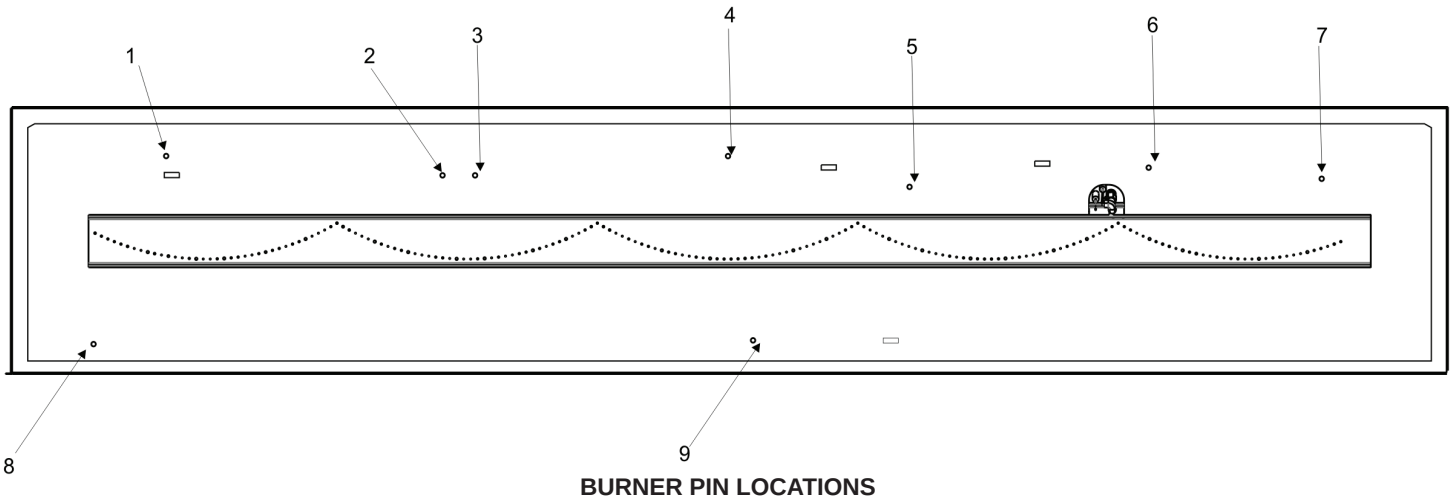


**BURNER PIN LOCATIONS**

# ROCK AND LOG PLACEMENT - DVLL72BP MODELS

11. Place **"Rock I"** on the right hand pin of **Rock H.**

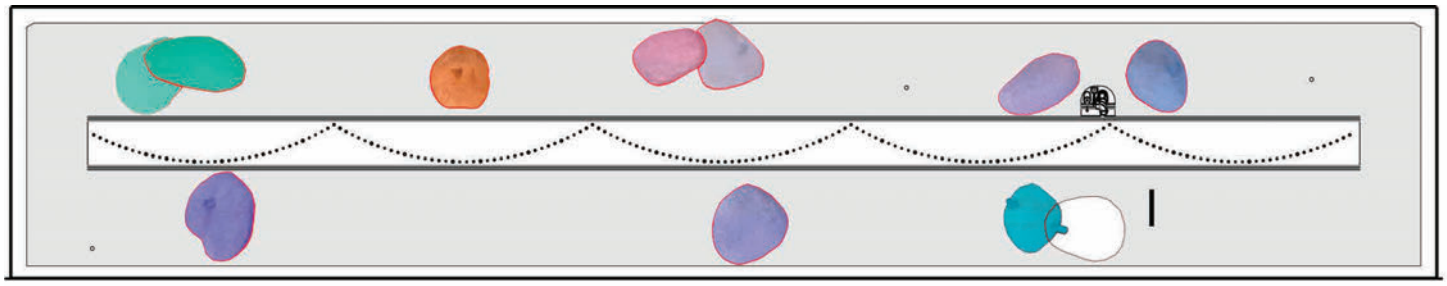


## TOP VIEW

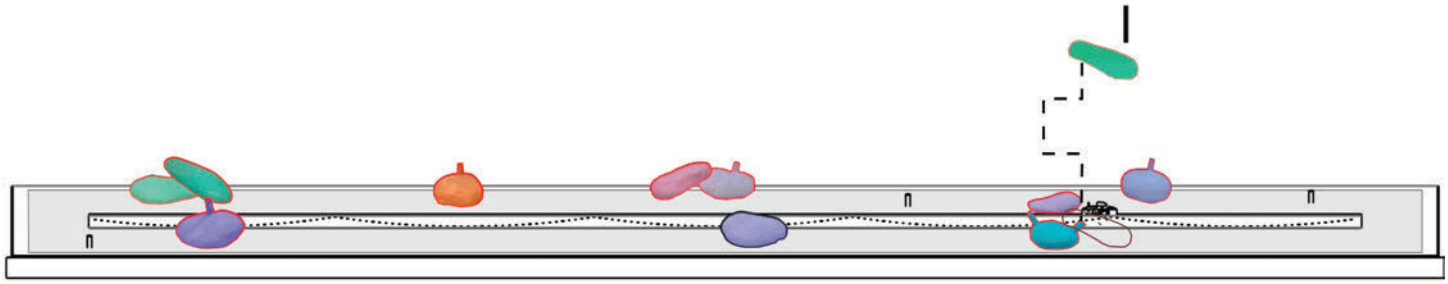


## FRONT VIEW

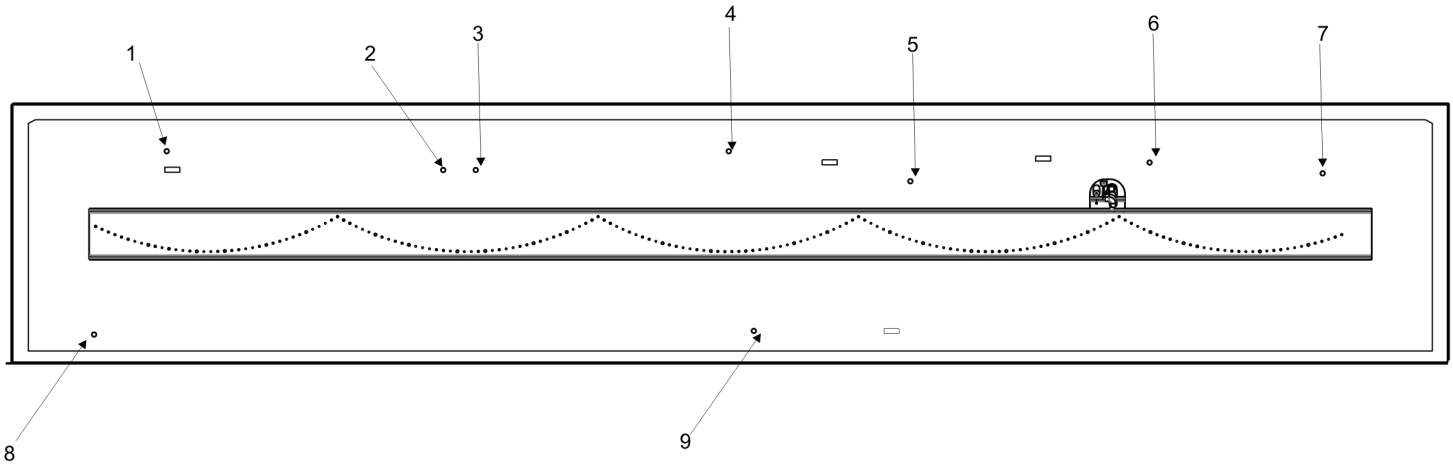


**BURNER PIN LOCATIONS**

# ROCK AND LOG PLACEMENT - DVLL72BP MODELS

12. Place **"Log L"** so the left end rests on the burner screen, and the pin on **Rock A.**

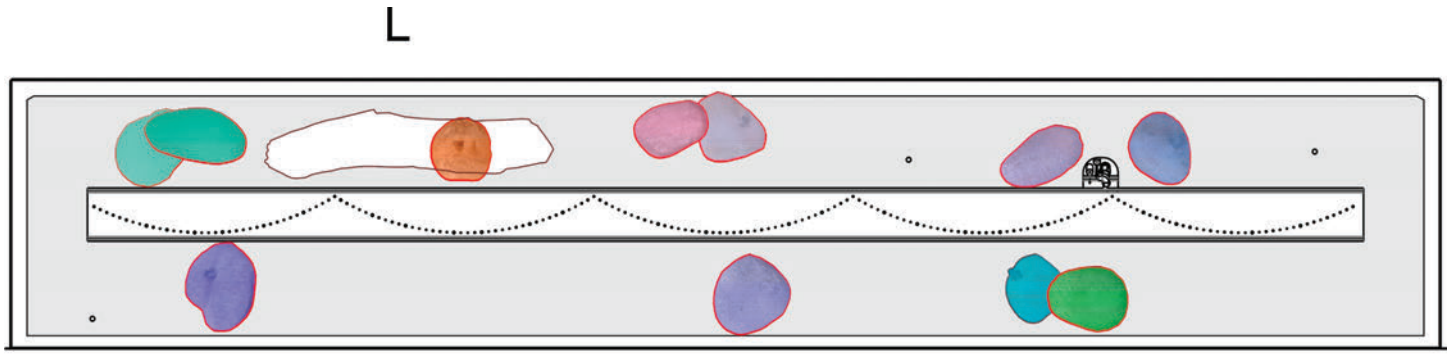


## TOP VIEW

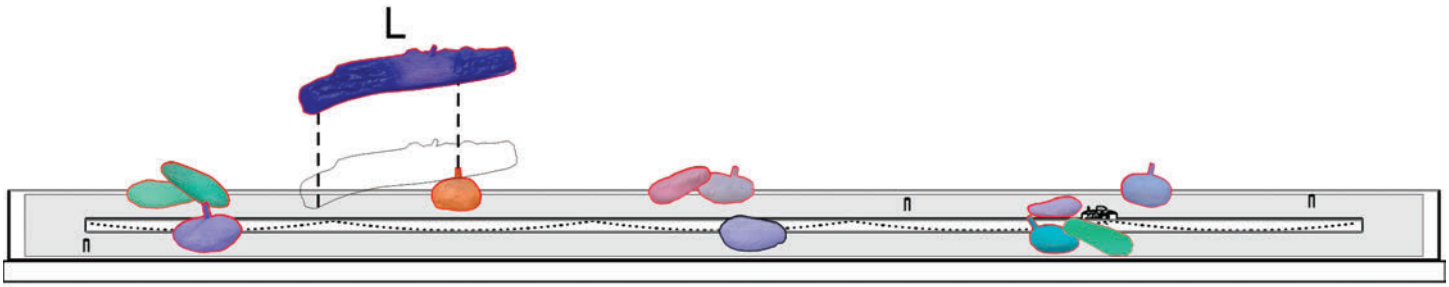


## FRONT VIEW

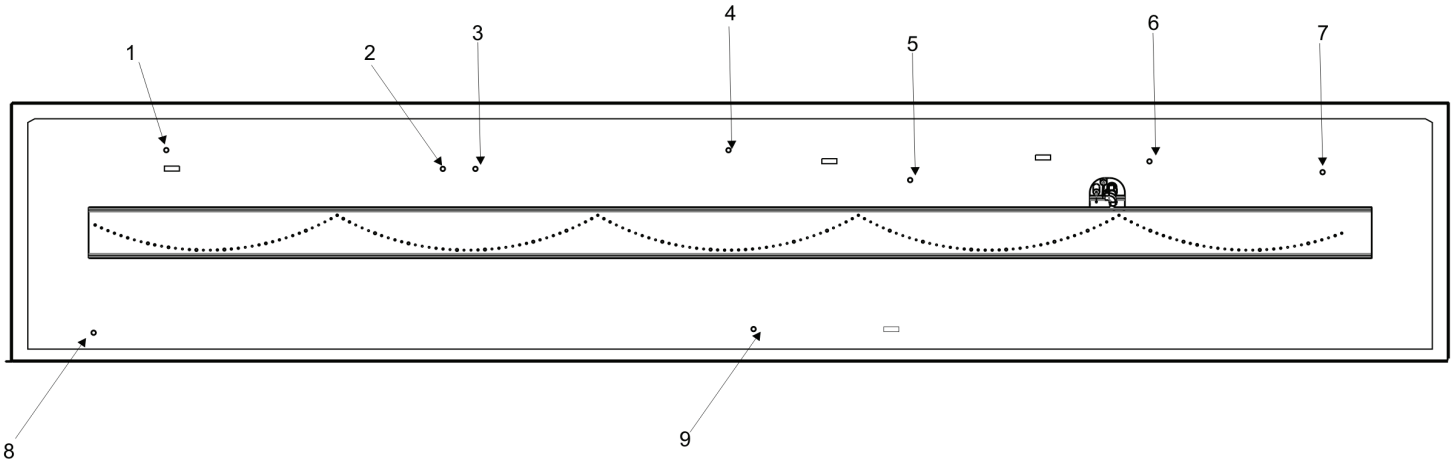


**BURNER PIN LOCATIONS**

# ROCK AND LOG PLACEMENT - DVLL72BP MODELS

13. Install **"Log M"** so it is pinned to **Log L** and extends down to rest on the burner screen in front of the burner. This log may be rotated slightly left/right in order to reduce direct flame impingement, determined during the initial firing of the fireplace.

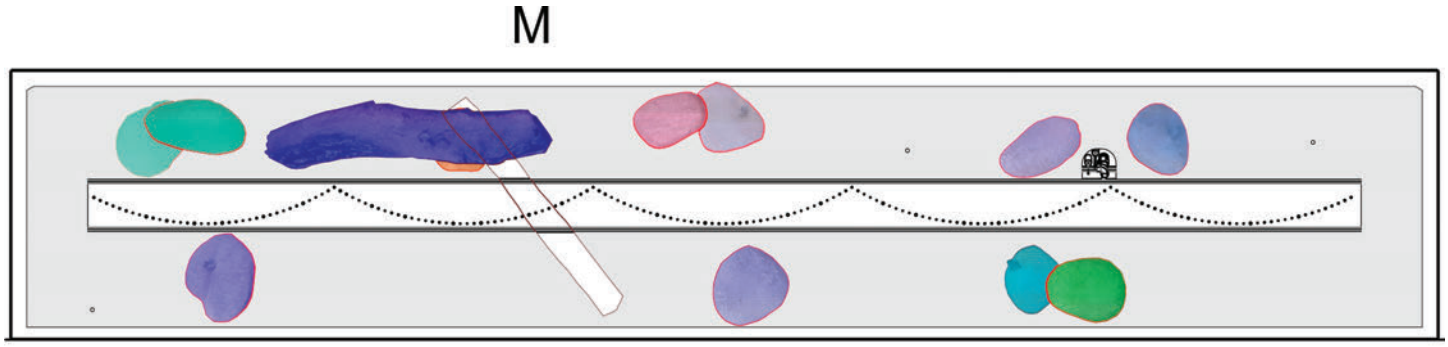


## TOP VIEW

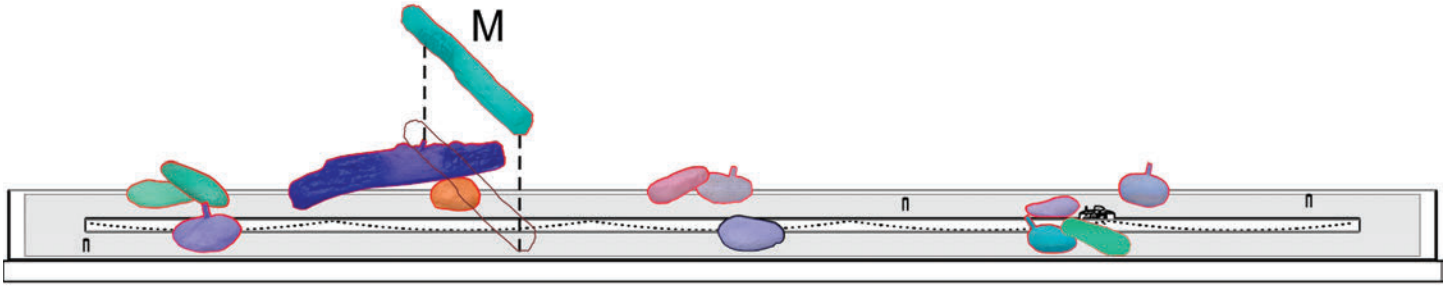


## FRONT VIEW

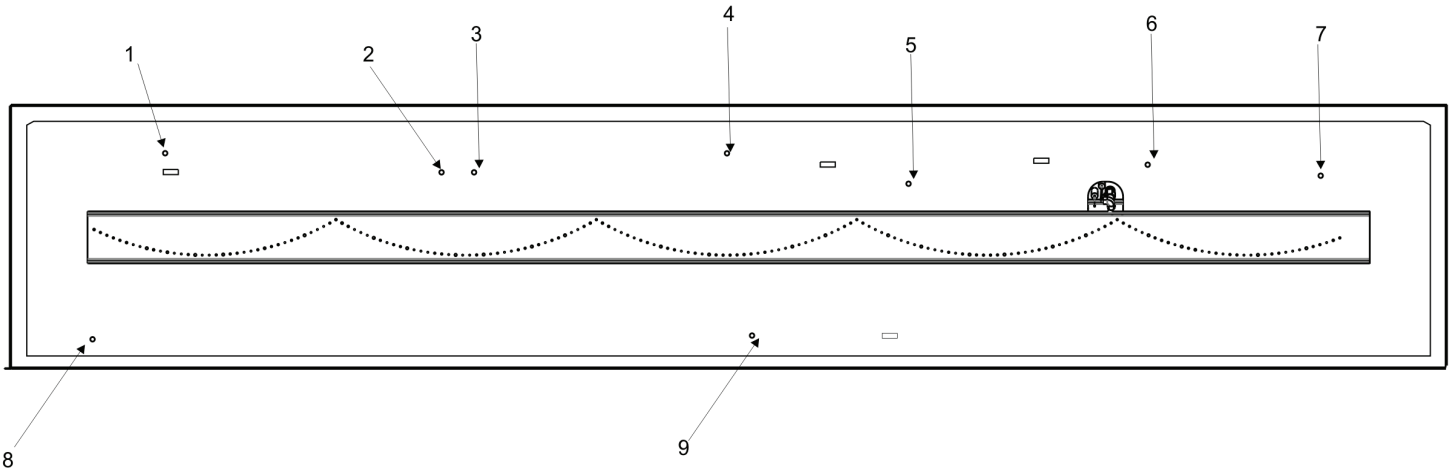


**BURNER PIN LOCATIONS**

# ROCK AND LOG PLACEMENT - DVLL72BP MODELS

14. Place one end of **"Log N"** to the pin located on **Rock C.** The other end of **Log N** will be located by pin # 5.

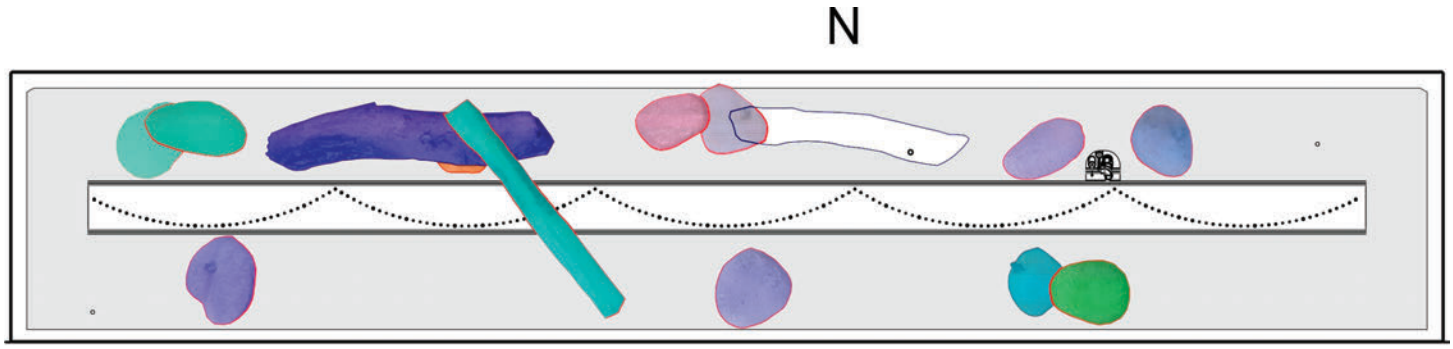


## TOP VIEW

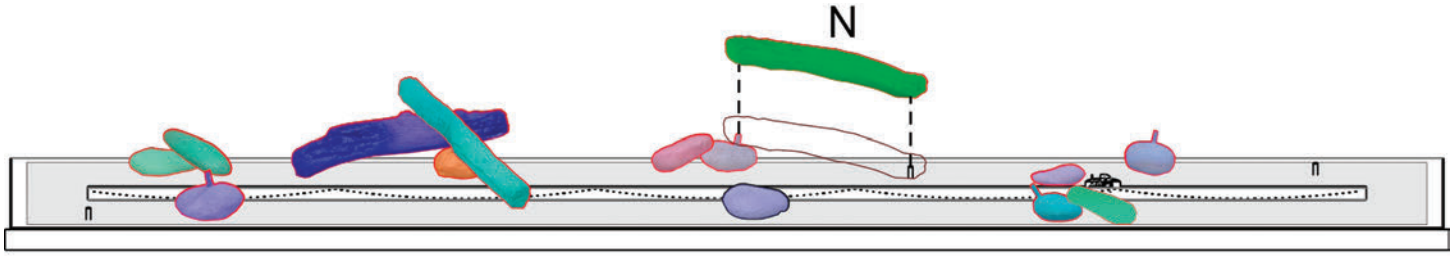


## FRONT VIEW

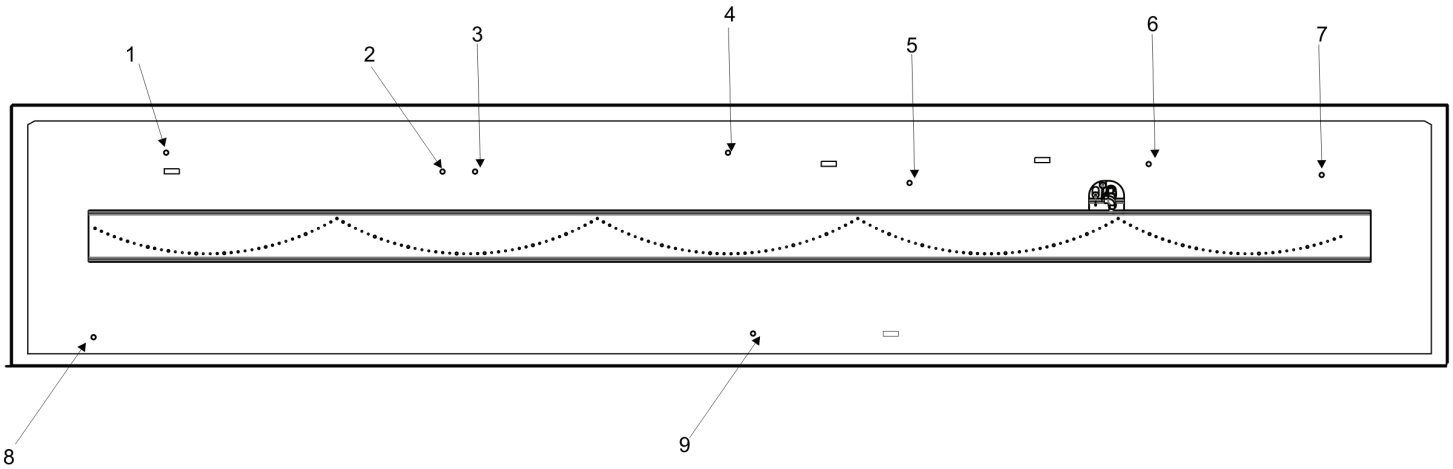


**BURNER PIN LOCATIONS**

# ROCK AND LOG PLACEMENT - DVLL72BP MODELS

15. Place **"Log O"** onto pin # 7 and the pin located on **Rock F.**

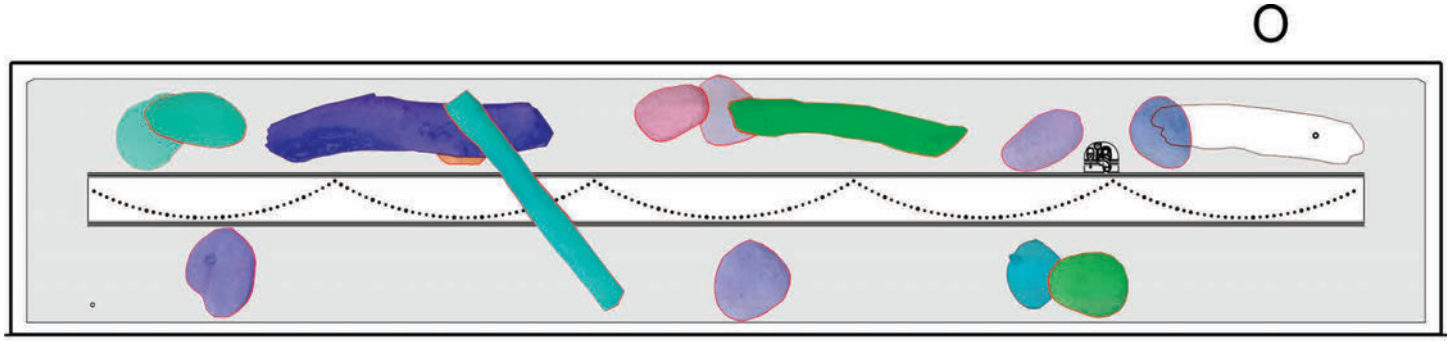


## TOP VIEW

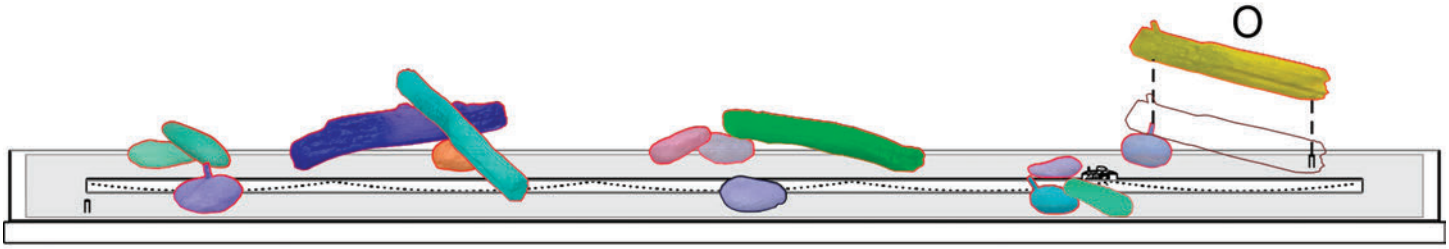


## FRONT VIEW

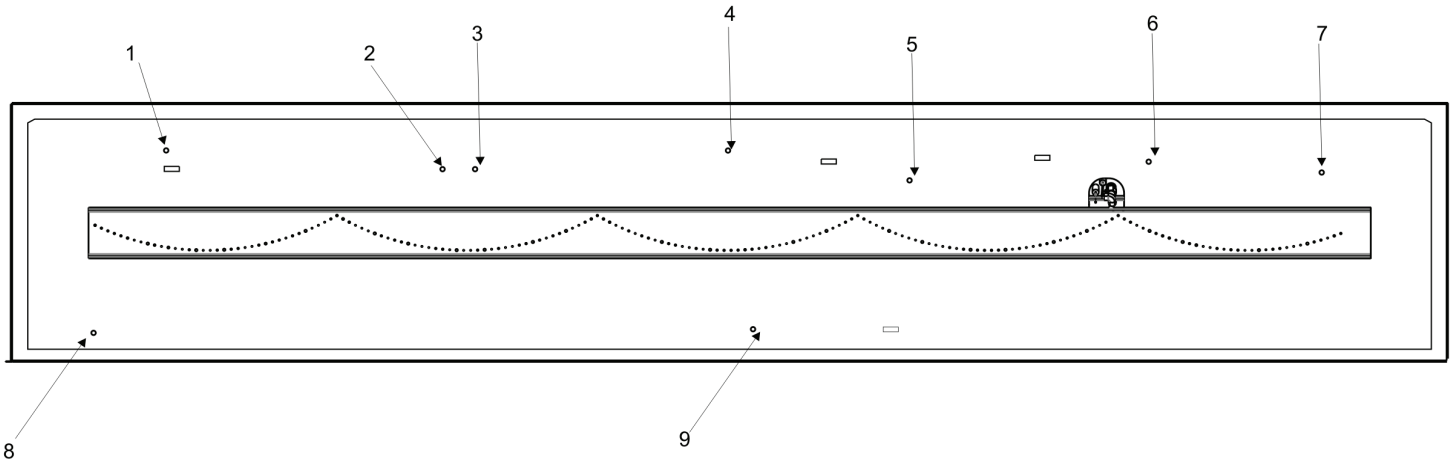


**BURNER PIN LOCATIONS**

# ROCK AND LOG PLACEMENT - DVLL72BP MODELS

16. Place **"Log P"** on the pin located on top of **Log O.** The opposite end of **Log P** will extend down to the front right corner of the burner screen, and against the **Front Glass Retainer.**

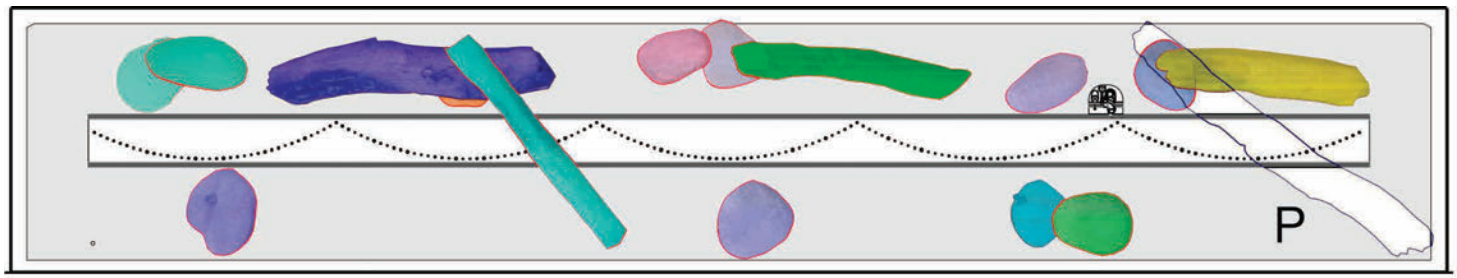


## TOP VIEW

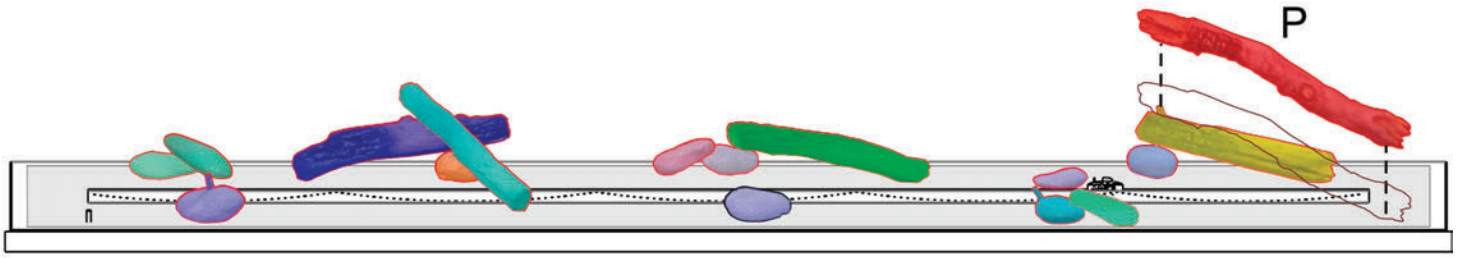


## FRONT VIEW

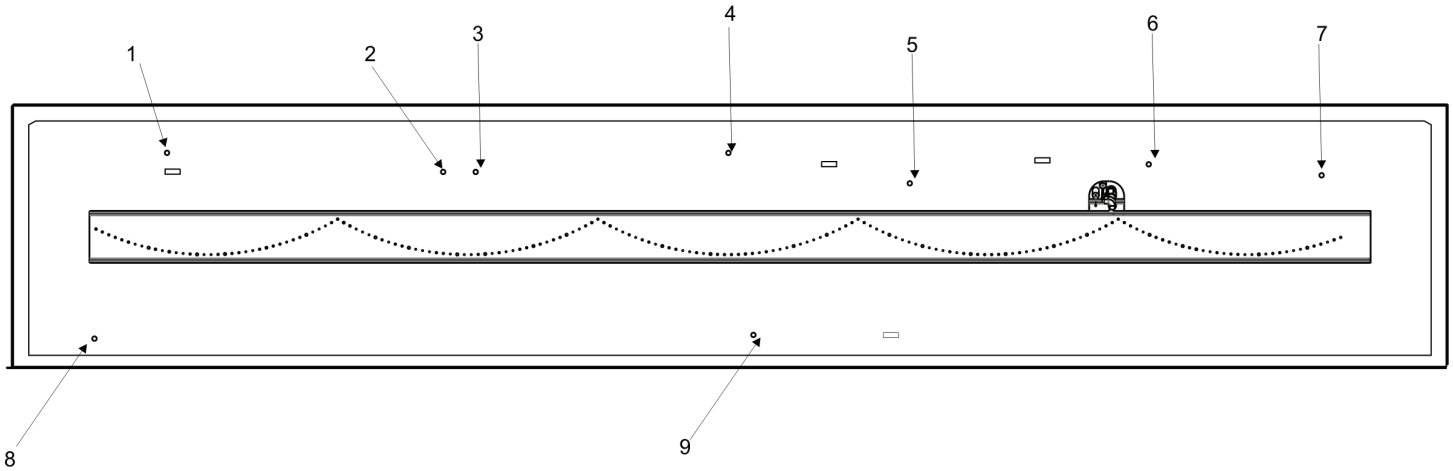


**BURNER PIN LOCATIONS**

# ROCK AND LOG PLACEMENT - DVLL72BP MODELS

17. Place **"Log Q"** on pin # 8 and the opposite end pinned to **Rock F.**

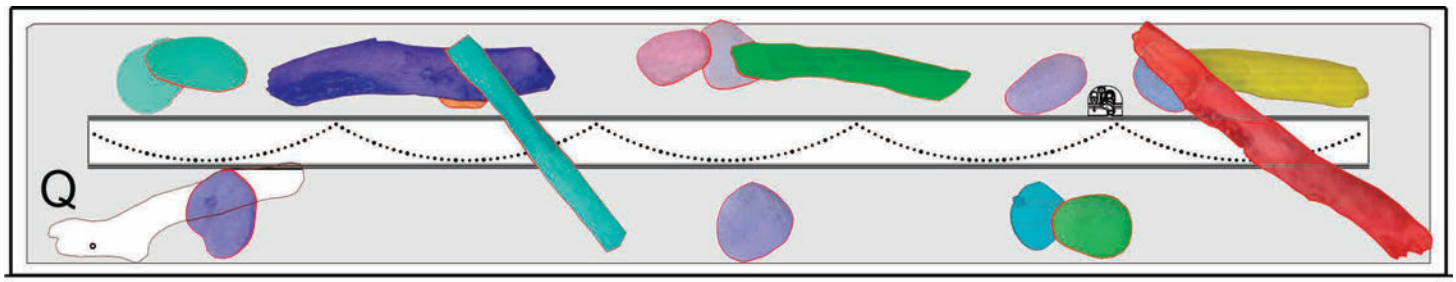


## TOP VIEW

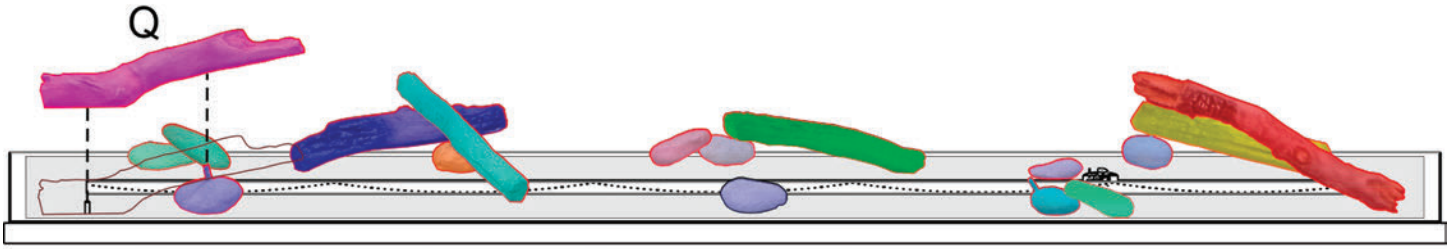


## FRONT VIEW

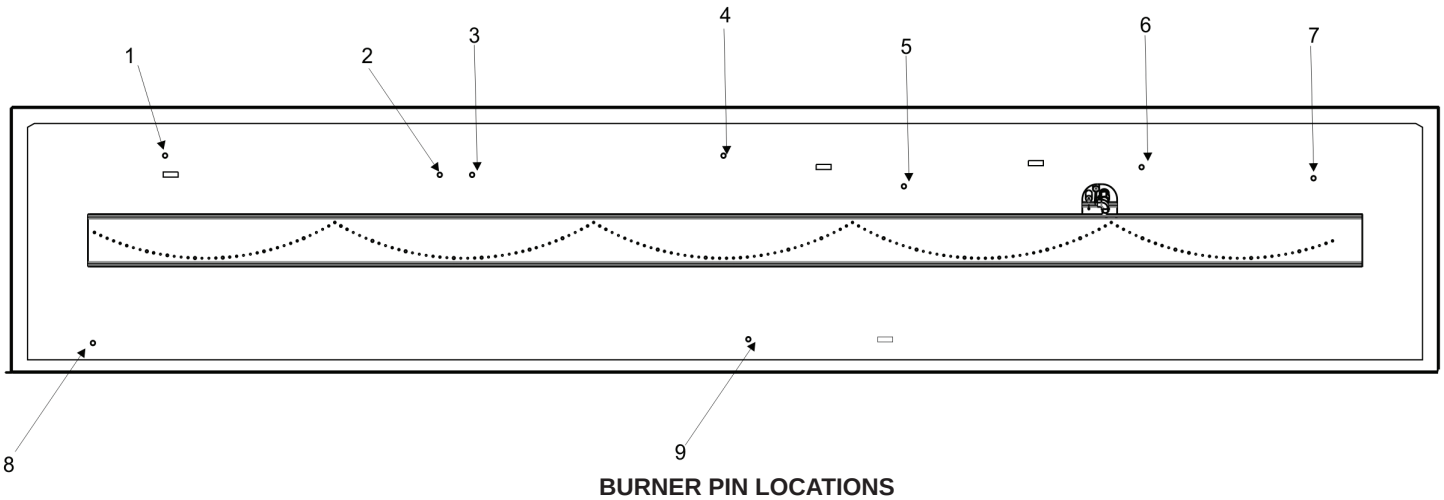


**BURNER PIN LOCATIONS**

# ROCK AND LOG PLACEMENT - DVLL72BP MODELS

18. Place the right end of **"Log R"** onto the left hand pin on **Rock H.** The left end of **Log R** can be placed on the burner screen, in front of the burner.

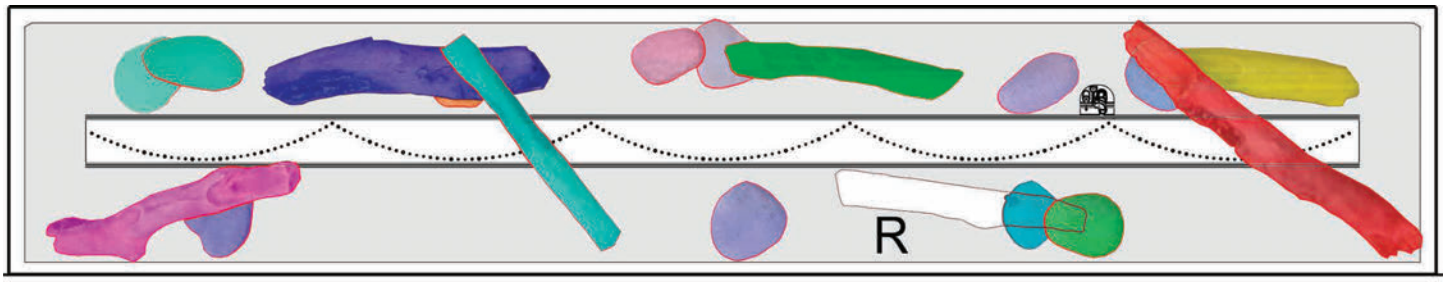


## TOP VIEW

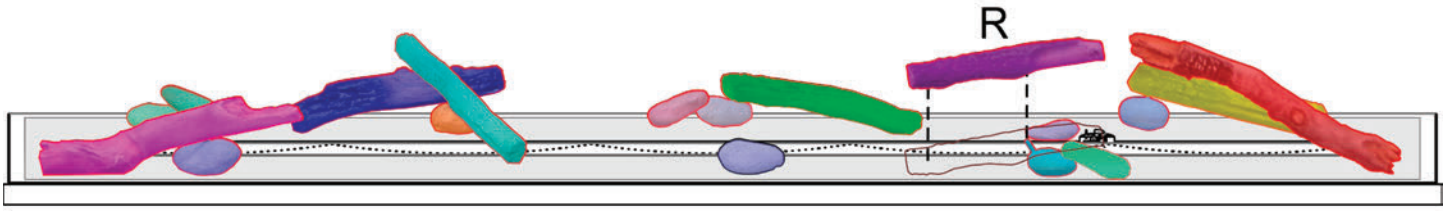


## FRONT VIEW

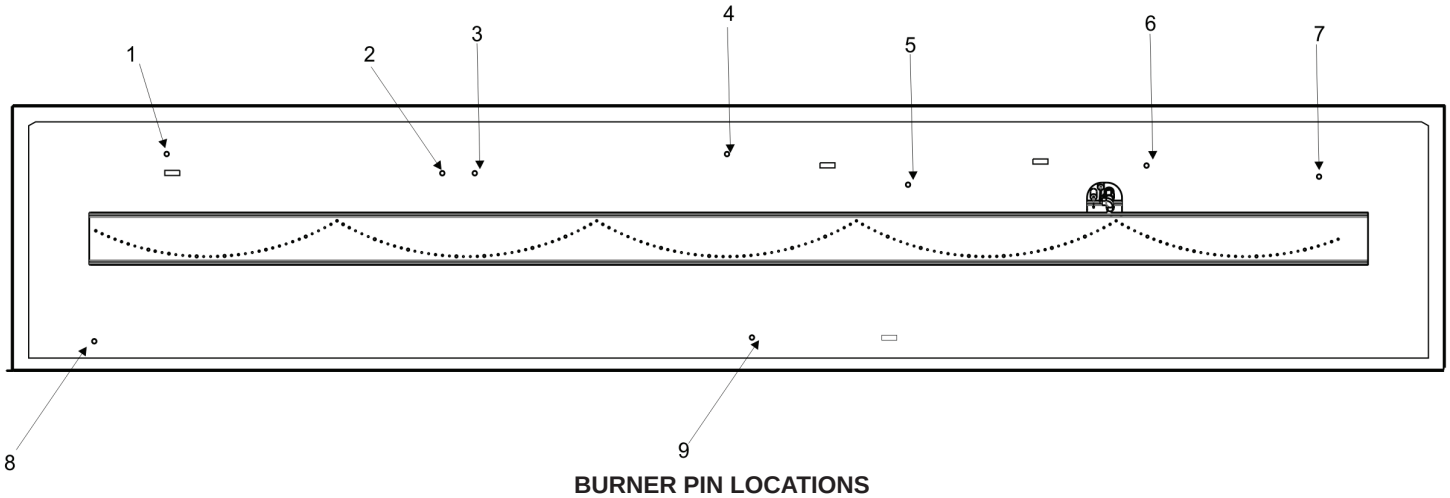


**BURNER PIN LOCATIONS**

# ROCK AND LOG PLACEMENT - DVLL72BP MODELS

19. Log Set assembly is complete.

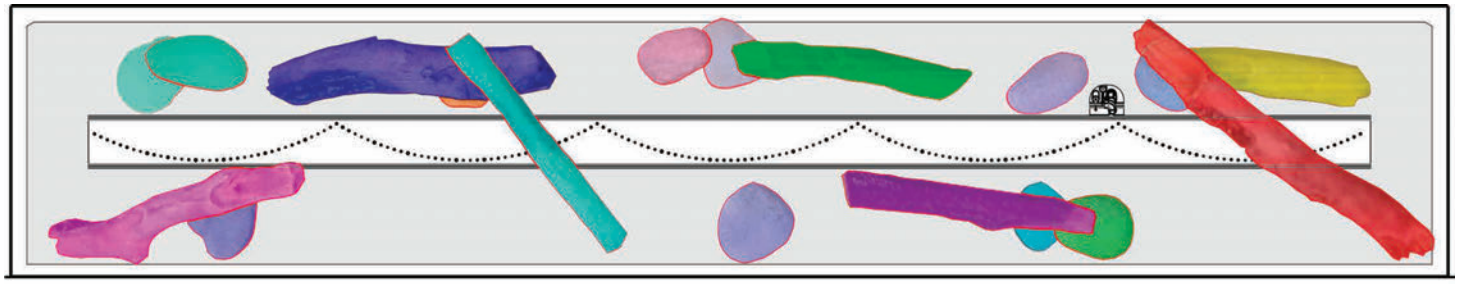

## TOP VIEW

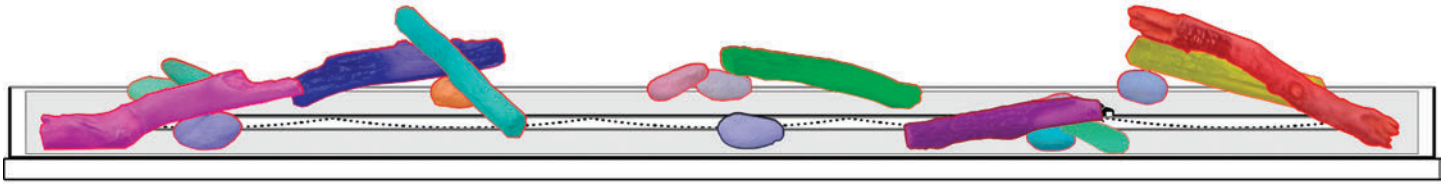

## FRONT VIEW

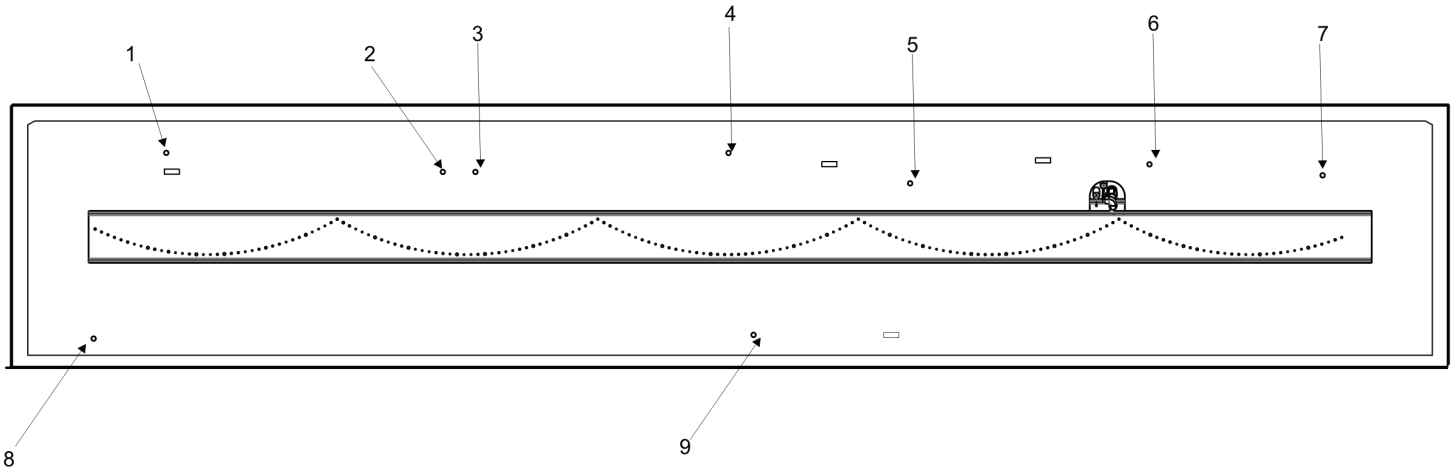


**BURNER PIN LOCATIONS**

# COMPLETING INSTALLATION - DVLL72BP MODELS

**Crushed Glass Media**

1. Place crushed glass media onto the burner screen. See the Installation Instructions supplied with the fireplace for more information.
2. Place crushed media over the burner and burner screen in a single layer. Use just enough crushed glass media to mask the burner screen (approximately 6 Sq. Ft. minimum).

   **Glass Quantity:**
   **DVLL72BP:** Use up to 8 Sq. Ft. of 1/4-inch crushed glass.

***NOTICE:*** On the Propane Gas burner, an extra layer or two of crushed glass on top of the burner may be applied to soften the flames. DO NOT use excessive amounts of crushed glass or sooting may occur.

***NOTICE:*** 1/4-inch crushed glass media is required on the burner and the burner screen. DO NOT place crushed glass in the pilot recessed area.

***NOTICE:*** Clear crushed glass is recommended on the screen cover to allow the LED lighting to shine through the glass. Other crushed glass colors can be used over the burner or sprinkled with clear glass to accent as desired.

**Optional Stainless Steel Coils**

Place the coils inside the fireplace. DO NOT place the coils in a location where they will come into contact with flame. If coils come in contact with flame, sooting may occur.

***NOTICE:*** Placement of coils near flame will cause the metal coil to discolor with shades of blue or brown. However, does not effect the performance of the fireplace.

**Final Steps**

1. Re-install the glass door assembly. Test fire to ensure there is minimal contact between the flame and the logs, rocks and curls.
2. If the test fire is acceptable, re-install the barrier screen assembly.
3. If during the test firing there seems to be significant flame impingement on the cross logs, there are two steps that can be taken to reduce the impingement:
   a. Pivot log left or right to move away from flame.
   b. Thin out crushed glass directly under the cross log. This can reduce the height of the flame directly under the log.

# ROCK AND LOG PLACEMENT - DVLL48SP MODELS

**Before you begin:** Do not, handle these logs with your bare hands! Always wear gloves to prevent skin irritation. After handling logs, wash your hands gently with soap and water.

Install firebox liner kit prior to placing the logs and rocks.

**All Logs And Rocks**
The positioning of the logs and rocks is critical to the safe and clean operation of this heater. Sooting and other problems may result if the logs are not properly positioned in the appliance. **DO NOT place the logs such that they impinge upon the flame.**

**ATTENTION:** Refer to Pages 4 and 5 Parts List and Parts View to order logs or rocks.

# GLASS PLACEMENT

**If a liner has not been installed, stop and install one before proceeding with media placement.**

Install Logs and Rock Kit prior to placing the glass media.

Place crushed glass media over the burner, burner surrounds, and screens in a single layer. Use enough crushed glass media to cover these areas (8 Sq. Ft. mininum).

***NOTICE:*** The flame appearance can be modified by varying the depth of the glass media over the burner ports. Assess the flame appearance before adding more media than is necessary to cover the burner. Excessive glass media over the burner ports will cause sooting.

| ⚠ CAUTION |
| --- |
| **Place glass media carefully around the pilot opening. DO NOT bury the pilot with glass media.** |

***NOTICE:*** Once the installation is complete with the logs, rocks, and crushed glass media in place, operate the fireplace to verify flame appearance. If there are flames directly contacting a log or rock, reposition the log to eliminate the impingement.

# ROCK AND LOG PLACEMENT - DVLL48SP MODELS

The following log and rock placement sequence is specific to the DVLL48SP models and illustrates the manufacturer-recommended arrangement of components. By following this placement sequence, some components in the LSM1THF log and rock set will not be used.

**NOTE:** There are no pins on the burner surround (components are not positvely located).

**Deviating from these instructions is allowed so long as there is no impingement upon the flame.**

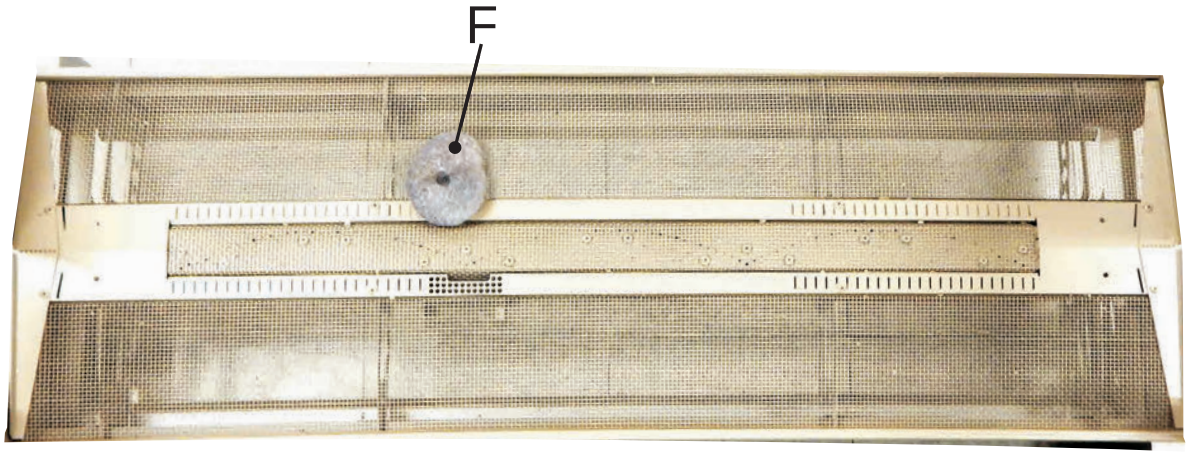


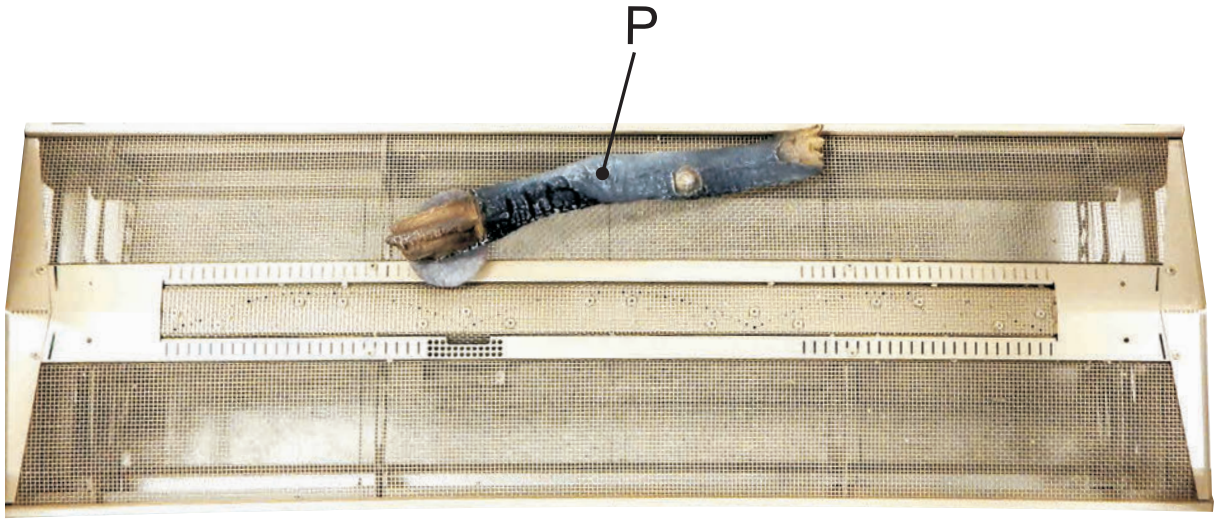


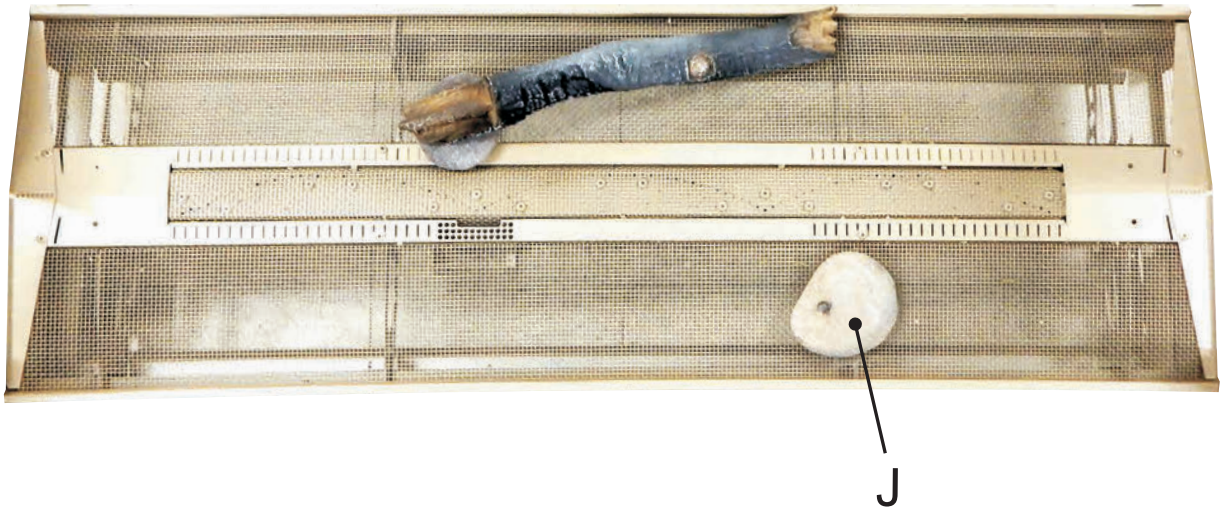

# ROCK AND PLACEMENT - DVLL48SP MODELS

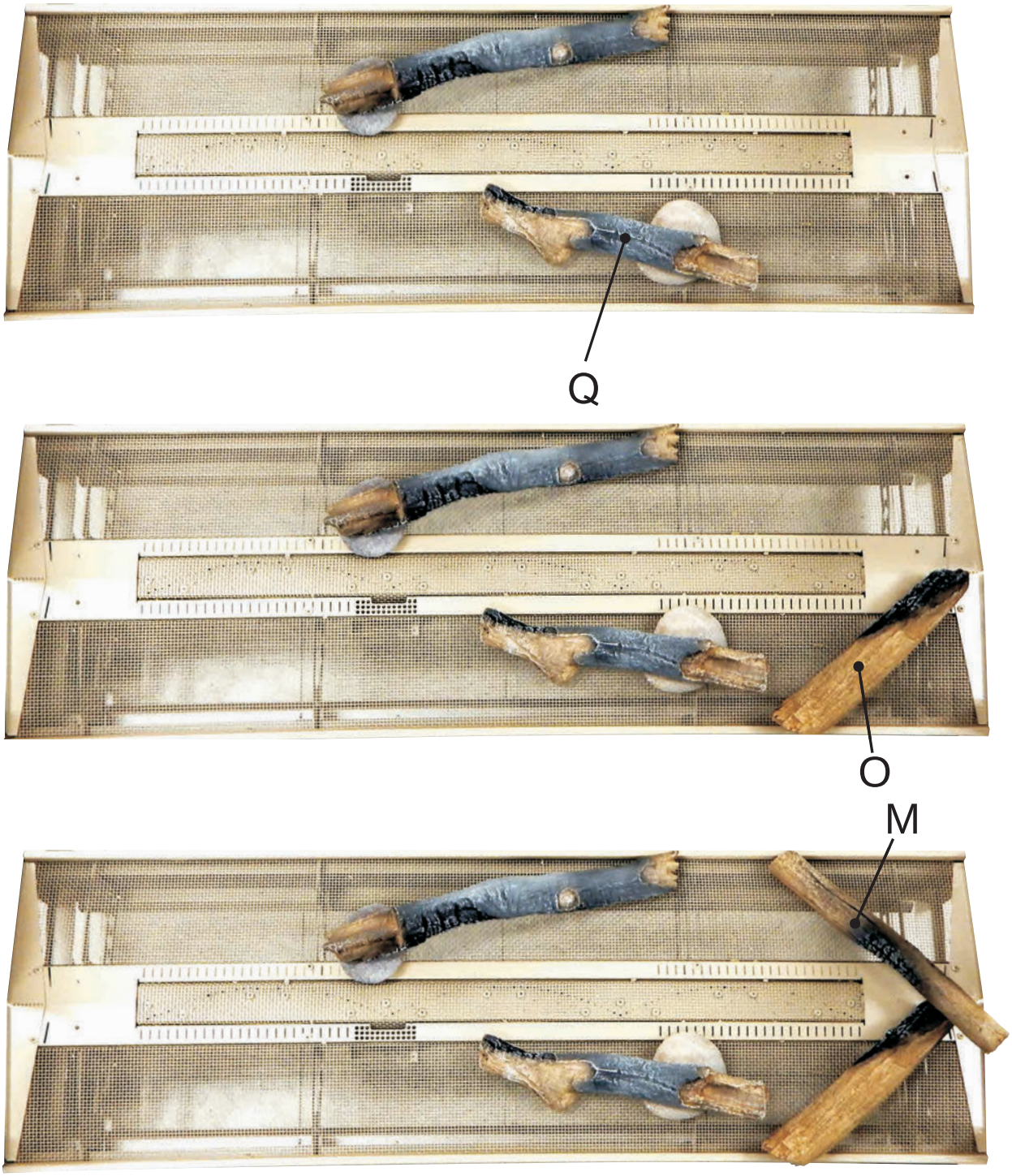

# ROCK AND LOG PLACEMENT - DVLL48SP MODELS

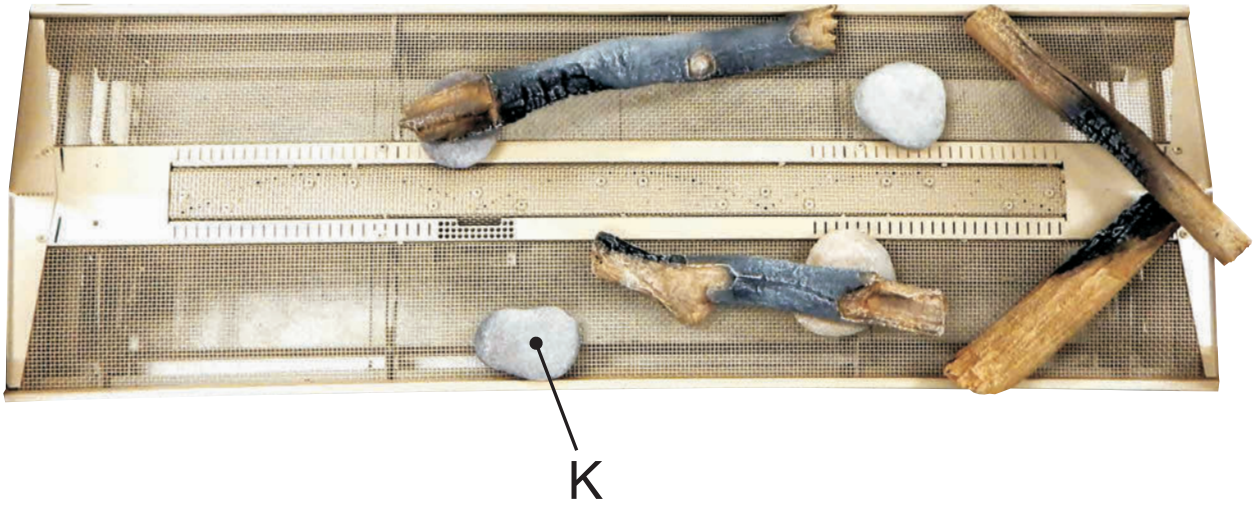


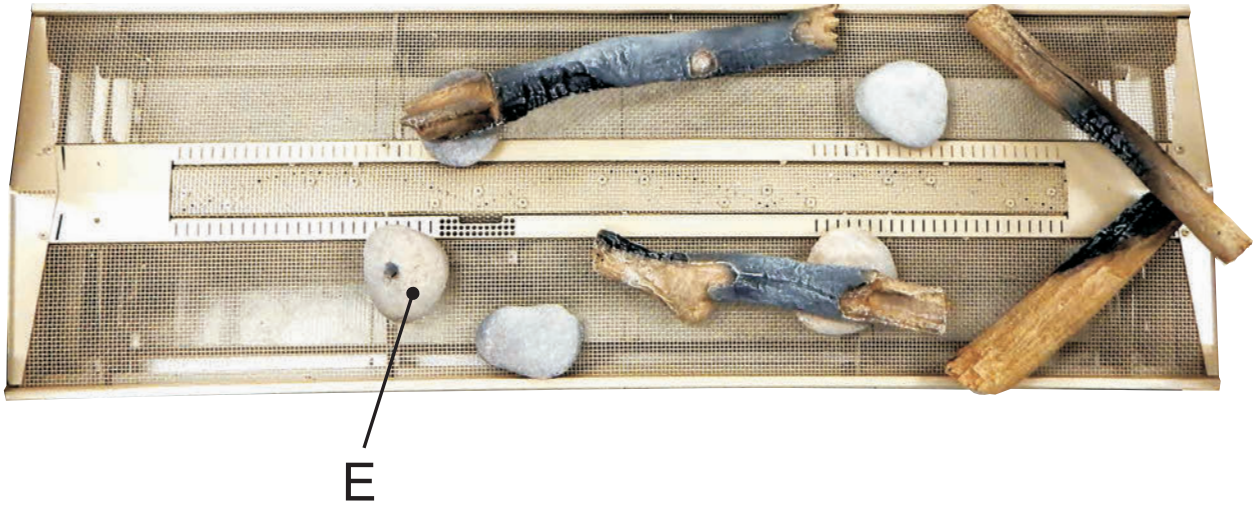

# ROCK AND LOG PLACEMENT - DVLL48SP MODELS

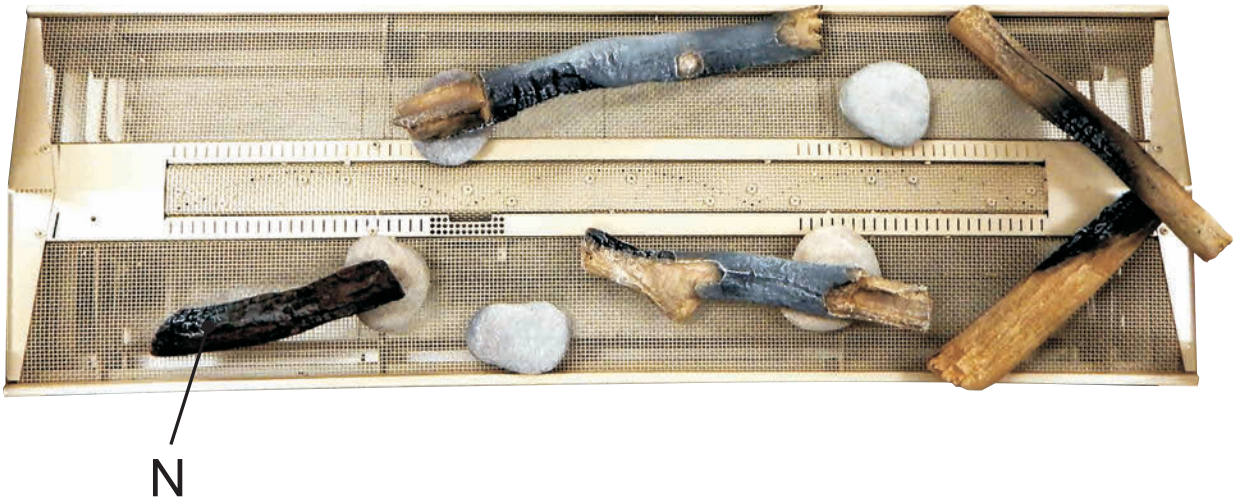


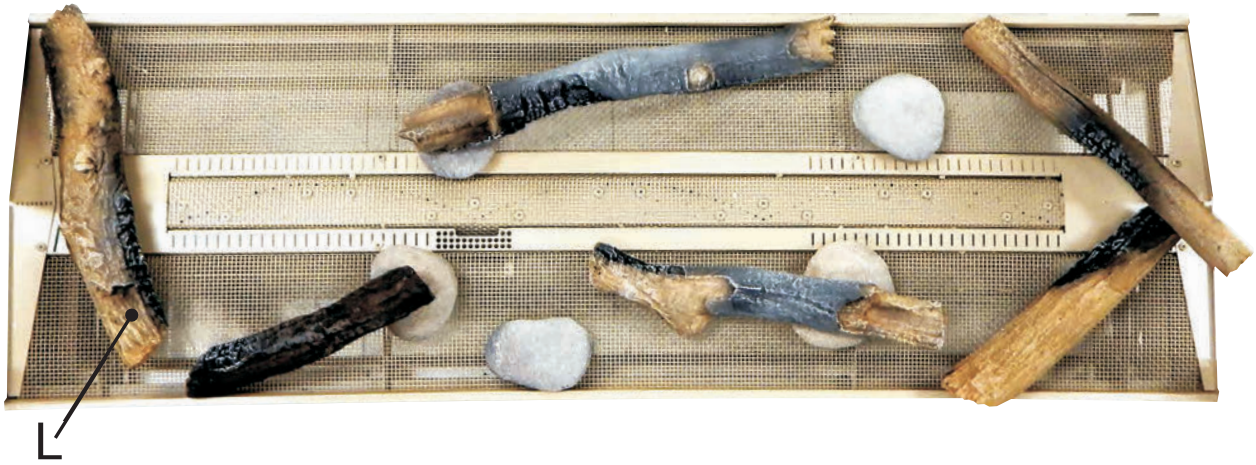

# COMPLETING INSTALLATION - DVLL48SP MODELS

**Crushed Glass Media**

1. Place crushed glass media onto the burner surround, burner screen and firebox floor screens. See the installation instructions supplied with the fireplace for more information.

***NOTICE:*** Crushed glass should not be placed on the burner screen area more than one layer deep. Excessive use of crushed glass may create a greater chance of sooting. Do not allow crushed glass to restrict the pilot flame. Do not place crushed glass in the pilot bracket area.

**Optional Stainless Steel Coils**

Place the coils inside the fireplace. DO NOT place the coils in a location where they will come into contact with the flame. If coils come in contact with the flame, sooting may occur.

***NOTICE:*** Placement of coils near a flame will cause the metal coil to discolor with shades of blue and brown, however this does not effect the performance of the fireplace.

**Final Steps**

1. Re-install the glass door assembly. Test fire to insure there is minimal contact between the flame and the logs, rocks and curls.
2. If the test fire is acceptable, re-install the barrier screen assembly.

# MASTER PARTS DISTRIBUTOR LIST

To Order Parts Under Warranty, please contact your local Empire dealer. See the dealer locator at www.empirecomfort.com. To provide warranty service, your dealer will need your name and address, purchase date and serial number, and the nature of the problem with the unit.

To Order Parts After the Warranty Period, please contact your dealer or one of the Master Parts Distributors listed below. This list changes from time to time. For the current list, please click on the Master Parts button at www.empirecomfort.com. Please note: Master Parts Distributors are independent businesses that stock the most commonly ordered Original Equipment repair parts for Heaters, Grills, and Fireplaces manufactured by Empire Comfort Systems Inc.

**Dey Distributing**
1401 Willow Lake Boulevard
Vadnais Heights, MN 55101

**Phone:** 651-490-9191
**Toll Free:** 800-397-1339
**Website:** www.deydistributing.com
**Parts: Heater, Hearth and Grills**

**F. W. Webb Company**
200 Locust Street
Hartford, CT 06114

**Phone:** 860-722-2433
**Toll Free:** 800-243-9360
**Fax:** 860-293-0479
**Toll Free Fax:** 800-274-2004
**Websites:** www.fwwebb.com & www.victormfg.com
**Parts: Heater, Hearth and Grills**

**East Coast Energy Products**
10 East Route 36
West Long Branch, NJ 07764

**Phone:** 732-870-8809
**Toll Free:** 800-755-8809
**Fax:** 732-870-8811
**Website:** www.eastcoastenergy.com
**Parts: Heater, Hearth and Grills**

# HOW TO ORDER REPAIR PARTS

**Parts Not Under Warranty**

Parts can be ordered through your Service Person, Dealer, or a Master Parts Distributor. See this page for the Master Parts Distributors list. For best results, the **service person or dealer** should order parts through the distributor. Parts can be shipped directly to the **service person/dealer**.

**Warranty Parts**

Warranty parts will need a proof of purchase and can be ordered by your Service Person or Dealer. Proof of purchase is **required** for warranty parts.

All parts listed in the Parts List have a Part Number. When ordering parts, first obtain the Model Number and Serial Number from the name plate on your equipment. Then determine the Part Number (**not** the Index Number) and the Description of each part from the following illustration and part list. Be sure to give all this information . . .

Appliance Model Number _____ Part Description _____

Appliance Serial Number _____ Part Number _____

Type of Gas (Propane or Natural) _____

Do not order bolts, screws, washers or nuts. They are standard hardware items and can be purchased at any local hardware store.

Shipments contingent upon strikes, fires and all causes beyond our control.

**Empire Comfort Systems Inc.**
**Belleville, IL**

If you have a general question about our products, please e-mail us at info@empirecomfort.com.

If you have a service or repair question, please contact your dealer.

**www.empirecomfort.com**