EMPIRE
COMFORT SYSTEMS
SINCE 1932

# INSTALLATION INSTRUCTIONS

## INSTALLER:
**Leave this manual with the appliance.**

## CONSUMER:
**Retain this manual for future reference.**

## DIRECT-VENT ZERO CLEARANCE GAS FIREPLACE HEATER SERIES:

**MILLIVOLT (MV)**
**DVCD(32,36,42)FP3(0,1)(N,P)-4**

**INTERMITTENT PILOT (IP)**
**DVCD(32,36,42)FP7(0,1)(N,P)-4**

### ⚠ WARNING

**FIRE OR EXPLOSION HAZARD**
**Failure to follow safety warnings exactly could result in serious injury, death, or property damage.**

— **Do not store or use gasoline or other flammable vapors and liquids in the vicinity of this or any other appliance.**
— **WHAT TO DO IF YOU SMELL GAS**
- **Do not try to light any appliance.**
- **Do not touch any electrical switch; do not use any phone in your building.**
- **Leave the building immediately.**
- **Immediately call your gas supplier from a neighbor's phone. Follow the gas supplier's instructions.**
- **If you cannot reach your gas supplier, call the fire department.**

— **Installation and service must be performed by a qualified installer, service agency or the gas supplier.**

**This appliance may be installed in an aftermarket, permanently located, manufactured home (USA only) or mobile home, where not prohibited by local codes.**

**This appliance is only for use with the type of gas indicated on the rating plate. This appliance is not convertible for use with other gases, unless a certified kit is used.**

## ⚠ DANGER

**HOT GLASS** WILL CAUSE BURNS.
**DO NOT TOUCH** GLASS UNTIL COOLED.
**NEVER** ALLOW CHILDREN TO TOUCH GLASS.

A barrier designed to reduce the risk of burns from the hot viewing glass is provided with this appliance and shall be installed for the protection of children and other at-risk individuals.

NATIONAL FIREPLACE INSTITUTE
NFI
CERTIFIED
**www.nficertified.org**

We suggest that our gas hearth products be installed and serviced by professionals who are certified in the U.S. by the National Fireplace Institute® (NFI) as NFI Gas Specialists.

GAS-FIRED
c UL us
LISTED
UL FILE NO. MH30033

This fireplace is design certified in accordance with American National Standard/CSA Standard ANSI Z21.88/CSA 2.33 and by Underwriters Laboratories as a Direct Vent Gas Fireplace Heater and shall be installed according to these instructions.

# TABLE OF CONTENTS


| SECTION | PAGE |
|---|---|
| Before You Start | 3 |
| Carton Contents & Hardware Pack | 4 |
| Homeowner Reference Information | 5 |
| Introduction | 5 |
| Specifications | 6 |
| Accessories | 6 |
| Vent System Identification | 7 |
| Special Vent Systems | 7 |
| Fireplace Dimensions | 8 |
| Clearances | 10 |
| Locating Fireplace | 11 |
| Gas Supply | 12 |
| Junction Box Wiring (for Optional Blower) | 14 |
| Installation | 14 |
| Vent Pipe Clearance | 16 |
| Venting Fireplace - Top | 19 |
| Examples - Top Vent Run | 23 |
| Venting Fireplace - Rear | 24 |
| Examples - Rear Vent Run | 25 |
| Rear Vent Conversion | 26 |
| Vent Clearances | 27 |
| Framing and Finishing | 28 |
| Termination Clearances | 30 |
| Horizontal Termination | 31 |
| Vertical Termination | 32 |
| DVVK-4F Flex Vent Instructions | 34 |
| DVVK-4RE Vent Kit Installation | 36 |
| Log Identification for DVCD32 Fireplaces | 39 |
| Log Placement for DVCD32 Fireplaces | 40 |
| Log Identification for DVCD36 Fireplaces | 49 |
| Log Placement for DVCD36 Fireplaces | 50 |
| Log Identification for DVCD42 Fireplaces | 58 |
| Log Placement for DVCD42 Fireplaces | 59 |
| Millivolt Operating Instructions | 68 |
| Millivolt Standing Pilot Wiring Diagram | 70 |
| Millivolt Standing Pilot Lighting Instructions | 71 |
| Millivolt Standing Pilot Troubleshooting | 72 |
| IPI Electronic System Operating Instructions | 73 |
| IPI Electronic System Wiring Diagram | 74 |
| Intermittent Pilot Lighting Instructions | 75 |
| Intermittent Pilot Control System Troubleshooting | 76-78 |
| Maintenance & Service - Qualified Service Person | 79-81 |
| DVCD32FP(3,7) Parts List | 82 |
| DVCD32FP(3,7) Parts View | 83 |
| DVCD36FP(3,7) Parts List | 84 |
| DVCD36FP(3,7) Parts View | 85 |
| DVCD42FP(3,7) Parts List | 86 |
| DVCD42FP(3,7) Parts View | 87 |
| Important Safety Information | 88 |
| Safety Information for Users of Propane Gas | 89 |
| Requirements for Massachusetts | 90 |
| Master Parts Distributor List | 91 |
| How To Order Repair Parts | 91 |
| Warranty | 92 |
| Appliance Service History | 93-95 |

# BEFORE YOU START

**Samples and Definitions:**

| ⚠ DANGER |
|---|
| **Indicates a hazardous situation which, if not avoided, will result in death or serious injury.** |

| ⚠ WARNING |
|---|
| **Indicates a hazardous situation which, if not avoided, could result in death or serious injury.** |

| ⚠ CAUTION |
|---|
| **Indicates a hazardous situation which, if not avoided, could result in minor or moderate injury.** |

***NOTICE:*** Addresses practices not related to personal injury.

Read all instructions before starting installation and follow them carefully to insure safety. Failure to follow the instructions will void the warranty and may cause a fire hazard.

The warranty will be voided by, and the warranter disclaims any responsibility for the following actions:

- Installation of any damaged fireplace or vent system component.
- Modification for the fireplace or direct vent system.
- Installation other than as instructed by Empire Comfort Systems.
- Improper positioning of logs, glass door, or decorative accessories.
- Installation and/or use of any component part not manufactured or approved by Empire Comfort Systems.

All correspondence should refer to complete Model Number, Serial Number and type of gas. Fill out the Homeowner Reference Section on page 5.

**Television Considerations**

Installing a television above a fireplace has become increasingly popular; however, the area above any fireplace gets hot and most TV manufacturers recommend against placing their products near a heat source.

If you install a television above this fireplace, Empire Comfort Systems accepts no responsibility for damage or injuries. Follow the television manufacturer's installation instructions, including any recommendations regarding proximity to heat sources.

If you have a TV above your fireplace, turn off the fireplace and let it cool completely before servicing or touching any buttons on the TV.

1. Determine where to install the fireplace. See page 11.
2. Frame the opening. See pages 14 - 15.
3. Install the fireplace. See page 15.
4. Install the venting. See pages 17 - 27.
5. Install and connect the gas lines. See pages 12 - 13.
6. Install the wiring. See pages 14, 70 and 74.
7. Light the fireplace. See pages 71 and 75.
8. Troubleshoot issues. See pages 72 and 76 - 78.
9. Place the serial number sticker located in the instruction envelope onto the "Homeowner Reference Information" page.
10. Show the homeowner where the rating plate and lighting instruction plate are located. **See Figure 1.**
11. Show the homeowner how to operate the fireplace.
12. Show the homeowner how to do the basic maintenance.
13. Read the safety information pages 92 - 94.
14. If located in the Commonwealth of Massachusetts, note the special requirements on page 95.

**Unpacking the fireplace**

1. Cut binding straps and shrink wrap.
2. Remove the top of the carton.
3. Carefully remove the carton contents.
4. Use the Carton Contents and Hardware Pack lists on page 4 to verify all components are present.
5. Verify that the fireplace and components have not been damaged during shipping.
6. Set fireplace in a location near to its final installation location.

**Preparation**

This fireplace and its components are safe when installed in accordance with this Installation Manual. Report any parts damaged in shipment to your dealer. Do not install the fireplace with damaged, incomplete or substitute parts.

Installation Considerations

- Gas supply piping – right or left side entrance
- Electrical supply and connections – for optional fan kit
  - 120V, 60Hz, 1 Amp
  - Right side entrance
- Allowable fireplace mounting surfaces:
  - A flat, hard, combustible or non-combustible surface
  - A raised platform of combustible or non-combustible material.
  - The four corners of the fireplace onto non-combustible material so that contact is made on all four perimeter edges on the bottom of the fireplace – such as on cylinder blocks (where allowed by local codes).
- If the fireplace is installed directly on carpeting, tile or other combustible material other than wood flooring, it should be installed on a metal or wood panel extending the full width and depth of the fireplace.
- This fireplace is designed to be installed in a zero-clearance enclosure. Combustible material can come in contact with the top and side standoff spacers, and the fireplace can be secured to combustible framing with the framing brackets provided with the fireplace.

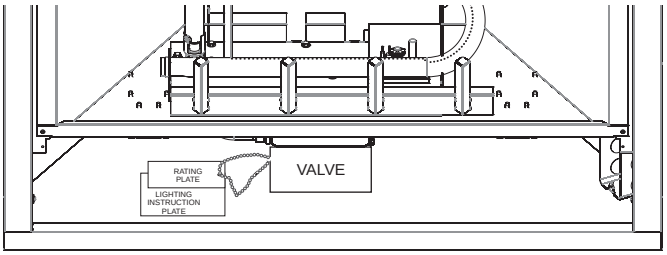


**Figure 1**

# CARTON CONTENTS & HARDWARE PACK

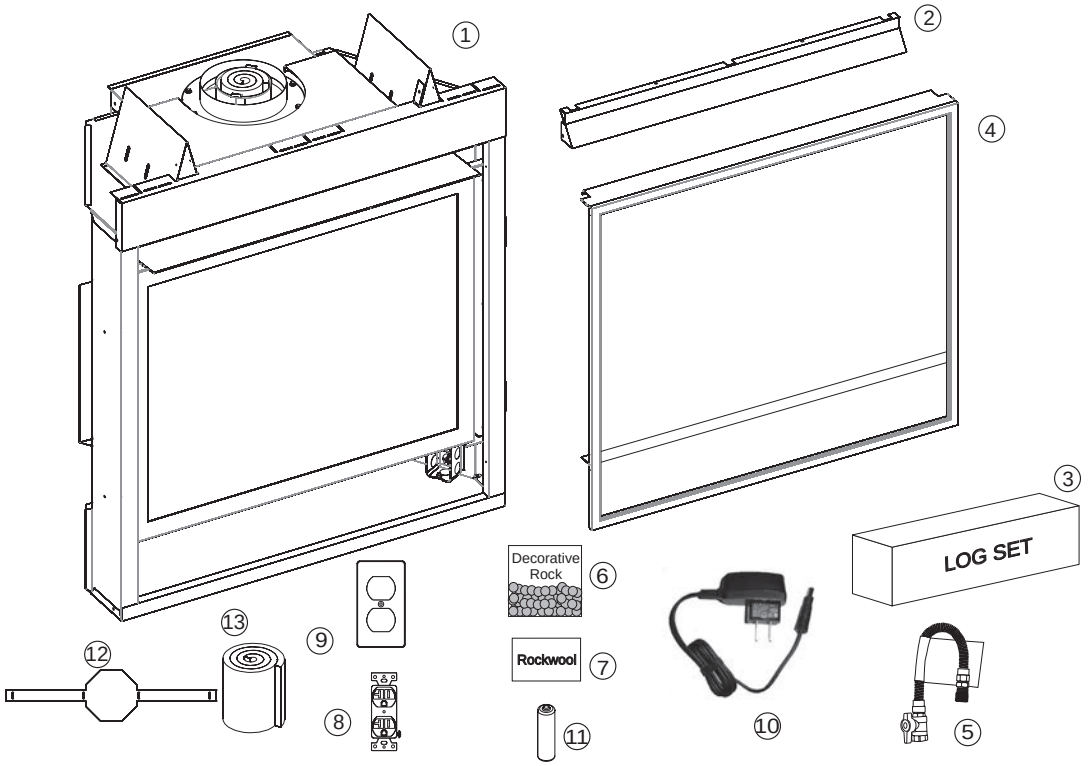


| Index Number | Description | Quantity Supplied | | Location |
|---|---|---|---|---|
| | | MV | IP | |
| 1 | Fireplace | 1 | 1 | Between carton caps |
| 2 | Canopy | 1 | 1 | Above window door |
| 3 | Log Set | 1 | 1 | Inside firebox |
| 4 | Barrier Screen | 1 | 1 | Mounted on fireplace |
| 5 | Flex Line w/Shut-off Valve | 1 | 1 | In envelope |
| 6 | Decorative Rock | 1 | 1 | Under log set |
| 7 | Rockwool | 2 | 2 | In envelope |
| 8 | 3-prong Receptacle | 1 | 1 | In envelope |
| 9 | Receptacle Cover | 1 | 1 | In envelope |
| 10 | AC Power Adapter | 0 | 1 | In envelope |
| 11 | AA Battery | 0 | 4 | In envelope |
| 12 | Insulation Retainer Bracket | 1 | 1 | In envelope |
| 13 | Flue Insulation | 1 | 1 | Inside firebox |

**NOTE:** Items 12 and 13 are used only if venting from the rear of the fireplace. Discard if venting from the top.

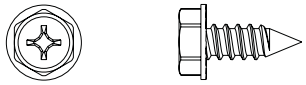

#10 X ½" HEX HEAD SCREW (QTY. 8)

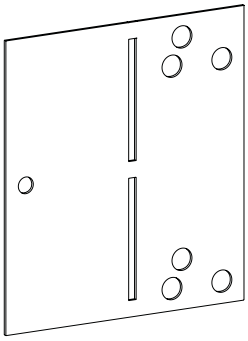

NAILING FLANGES (QTY. 4)

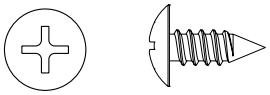

#8-18 X ½" PAN HEAD SCREW BLACK (QTY. 2)

# HOMEOWNER REFERENCE INFORMATION

We recommend that you record the following information about your fireplace.

Model Number: _____ Date purchased: _____

Serial Number: _____ Location of fireplace: _____

Dealer Name: _____ Dealer Phone: _____

Notes: _____

# INTRODUCTION

The information in this manual pertains to all models and gas control systems unless otherwise noted.

**Instructions to Installer**

1. Leave this manual with Homeowner.
2. Have the homeowner complete the Product Registration Card supplied with the fireplace; or register online at www.empirecomfort.com
3. Show the homeowner how to start and operate the fireplace.

**Notes to Installer**

- This fireplace is designed to:
  - Operate with combustion air siphoned from outside of the building.
  - Expel all exhaust gases to the outside of the building.
- The installation must conform with local codes or, in the absence of local codes, with the National Fuel Gas Code ANSI Z223.1/NFPA 54* Natural Gas and Propane Installation Code, or CSA B149.1 in Canada. * Available from the American National Standards Institute, Inc. 11 West 42nd St., New York, N.Y. 10036
- Any alteration of the original design, installation other than as shown in these instructions, or use with a type of gas not shown on the rating plate is the responsibility of the person and company making the change.
- This fireplace is not for use with solid fuels.
- These fireplace models may be installed in a bedroom or bed-sitting room in the U.S.A. and Canada.

**⚠ WARNING**

**Any change to this fireplace can be dangerous. Improper installation or use of the firebox can cause serious injury or death from fire, burns, explosion or carbon monoxide poisoning.**

**Fireplace Certification**

This fireplace is design certified in accordance with American National Standard/CSA Standard ANSI Z21.88/CSA 2.33 and by Underwriters Laboratories as a Direct Vent Gas Fireplace Heater and shall be installed according to these instructions.
Consult your local building code agency, prior to installation, to ensure compliance with local codes-including permits and inspections.
The fireplace, when installed, must be electrically grounded in accordance with local codes or, in absence of local codes, with the National Electric Code ANSI/NFPA 70 or Canadian Electric code, CSA C22.1, if an external electrical source is utilized.

**Qualified Installing Agency**

Installation and replacement of gas piping, gas utilization equipment or accessories and repair and servicing of equipment shall be performed only by a qualified agency. The term “qualified agency” means any individual, firm, corporation or company which either in person or through a representative is engaged in and is responsible for (a) the installation or replacement of gas piping or (b) the connection, installation, repair or servicing of equipment, who is experienced in such work, familiar with all precautions required and has complied with all the requirements of the authority having jurisdiction.

Commonwealth of Massachusetts: The installation must be made by a licensed plumber or gas fitter in the Commonwealth of Massachusetts.

**High Altitude**

When installing this fireplace at an elevation above 2000 feet (in the United States) it may be necessary to decrease the input rating by changing the existing burner orifice to a smaller size. Generally, input should be reduced 4 percent for each 1000 feet above sea level. However, if the heating value of the gas has been reduced, this general rule may not apply. Check with **EMPIRE COMFORT SYSTEMS** for proper orifice size identification.

**Canadian High Altitude**

Altitude: 0-4500 feet (0-1370 m)
When installing this fireplace at an elevation above 4500 feet (in Canada), check with local authorities.
Consult your local gas utility for assistance in determining the proper orifice for location.

# SPECIFICATIONS

| | DVCD32 Natural Gas | DVCD32 Propane Gas | DVCD36 Natural Gas | DVCD36 Propane Gas | DVCD42 Natural Gas | DVCD42 Propane Gas |
|---|---|---|---|---|---|---|
| Input BTU/Hr Maximum | 18,000 | 18,000 | 20,000 | 20,000 | 25,000 | 25,000 |
| Input BTU/Hr Minimum | 14,000 | 14,000 | 14,000 | 16,500 | 18,000 | 19,500 |
| KWH Maximum | 5.3 | 5.3 | 5.9 | 5.9 | 7.3 | 7.3 |
| KWH Minimum | 4.1 | 4.1 | 4.1 | 4.1 | 5.3 | 5.3 |
| Orifice | #46 (0.081 inch) | #56 (0.0465 inch) | 2.10mm | #55 (0.052 inch) | #42 (0.0935 inch) | 1.45mm |
| Air Shutter Opening (inches) | 1/16 | 1/4 | 1/16 | 5/16 | 3/16 | 5/16 |
| Gas Inlet Shutoff Valve (pipe) | 1/2 NPT | 1/2 NPT | 1/2 NPT | 1/2 NPT | 1/2 NPT | 1/2 NPT |

***NOTICE***: Air shutter settings are factory minimum settings. Some venting configurations may require minor air shutter adjustments for optimum performance.

| GAS SUPPLY PRESSURES (inches water column) | | | |
|---|---|---|---|
| **Gas Type** | **Maximum** | **Minimum** | **Manifold** |
| Natural | 14.0 | 4.5 | 3.5 |
| Propane | 14.0 | 10.5 | 10.0 |

# ACCESSORIES

The following accessories are available from your Empire Dealer.

| ACCESSORIES | |
|---|---|
| **Description** | **Model** |
| Ember Bed Kit | EK1 |
| Platinum Glowing Embers | PE20 |
| Variable Speed Blower | FBB4 |
| Flex Gas Line, 24-in Stainless Steel | GF24 |

***NOTICE***: Empire Comfort Systems does not offer a mantel for this series of fireplaces.

| CONTROL OPTIONS | |
|---|---|
| **Description** | **Model** |
| Battery Remote, On/OFF | FRBC |
| Battery Remote, Thermostat | FRBTC |
| Remote, Electric | FREC |
| Remote, Programmable | FRBTP |
| Wall Switch, On/Off | FWS1 |
| Wall Thermostat – Reed Switch | TMV |
| Wall Thermostat – Wireless | TRW |

| VENT KITS | |
|---|---|
| **Part No.** | **Description** |
| DVVK4TSP | Top Vent Kit (horizontal) – 4-1/2 to 6-inch wall thickness |
| DVVK4TP | Top Vent Kit (horizontal) – 8 to 12-inch wall thickness |
| DVVK4RP | Rear Vent Kit (horizontal – 5 to 7-inch wall thickness |
| DVVK4VP | Vertical Vent Kit |
| DVVK4F | Horizontal Flex Vent Kit (4-foot flex) |
| DVVK4RE | Horizontal round termination (wall thickness up to 13-3/4 inches) |
| DV822 | Vinyl Siding Kit for DVVK-4RE |

| CONVERSION KITS | | |
|---|---|---|
| **Kit #** | **Conversion Type** | **Used On** |
| 18816 | Propane to Natural | DVCD32FP3 |
| 18456 | Natural to Propane | DVCD32FP3 |
| 18817 | Propane to Natural | DVCD36FP3 |
| 18442 | Natural to Propane | DVCD36FP3 |
| 18818 | Propane to Natural | DVCD42FP3 |
| 18814 | Natural to Propane | DVCD42FP3 |
| 32881 | Propane to Natural | DVCD32FP7 |
| 32880 | Natural to Propane | DVCD32FP7 |
| 31759 | Propane to Natural | DVCD36FP7 |
| 32882 | Natural to Propane | DVCD36FP7 |
| 31761 | Propane to Natural | DVCD42FP7 |
| 31760 | Natural to Propane | DVCD42FP7 |

# VENT SYSTEM IDENTIFICATION

Begin the vent system installation by selecting the type of venting to be installed and the path that it will take. Verify that clearances are met throughout the path of the venting system. Determine if the fireplace is to be vented out the top.

Determine how the vent system will be terminated out the side of the house or through the roof. Verify the clearances for the termination.

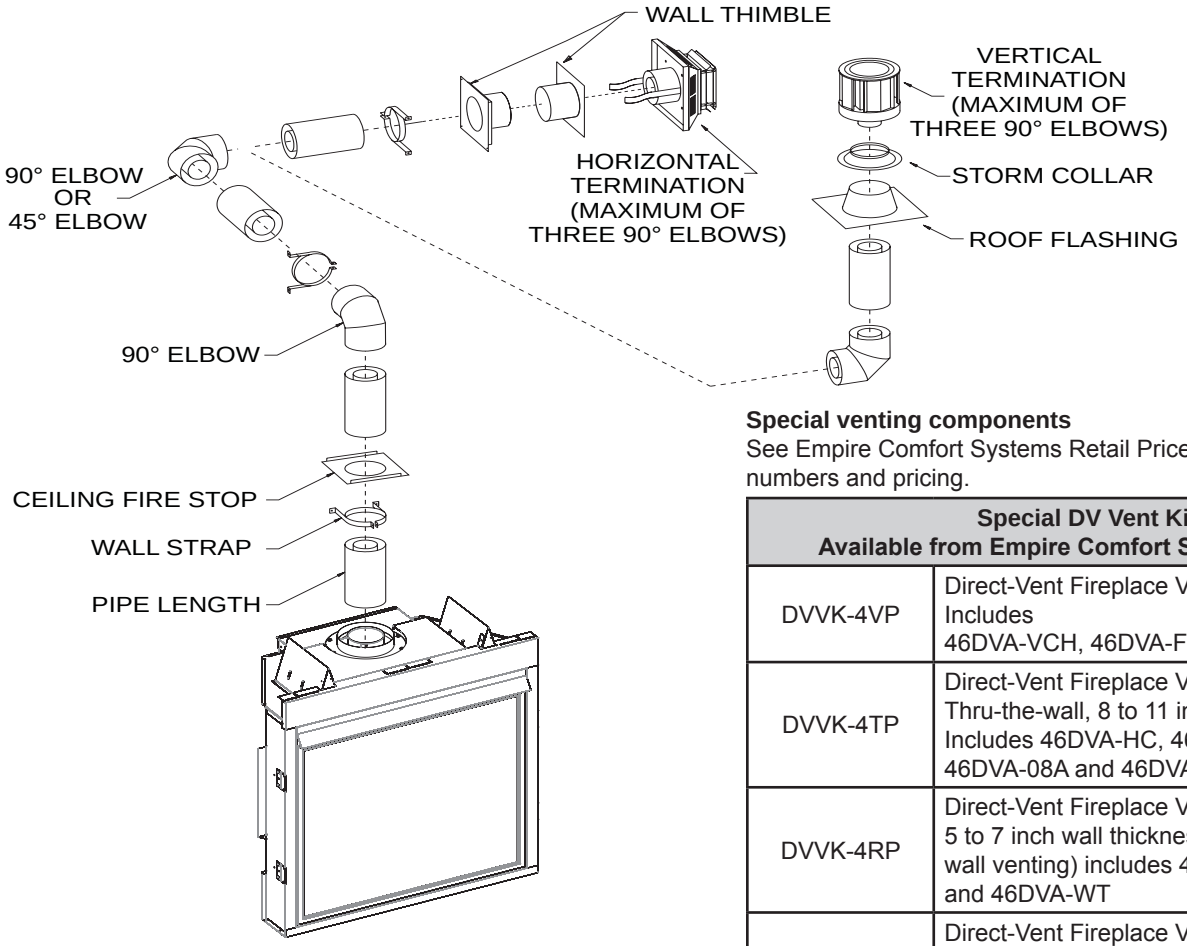


**Figure 2**

**Special venting components**

See Empire Comfort Systems Retail Price List for Duravent part numbers and pricing.

| Special DV Vent Kits Available from Empire Comfort Systems Dealers | |
|---|---|
| DVVK-4VP | Direct-Vent Fireplace Vent Kit - Vertical, Includes 46DVA-VCH, 46DVA-F6 and 46DVA-SC |
| DVVK-4TP | Direct-Vent Fireplace Vent Kit for Top Vent, Thru-the-wall, 8 to 11 inch wall thickness, Includes 46DVA-HC, 46DVA-E90, 46DVA-09, 46DVA-08A and 46DVA-WT |
| DVVK-4RP | Direct-Vent Fireplace Vent Kit for Rear Vent, 5 to 7 inch wall thickness, (standard thru-the-wall venting) includes 46DVA-06, 46DVA-HC and 46DVA-WT |
| DVVK-4RE | Direct-Vent Fireplace Vent Kit For Rear Vent, Thru-the-wall for 5 to 13 3/4 inch wall thickness. |
| DVVK-4TSP | Direct-Vent Fireplace Vent Kit for Top Vent, Thru-the-wall, 5 to 7 inch wall thickness, Includes 46DVA-HC, 46DVA-E90, 46DVA-06 and 46DVA-WT |
| DVVK-4FV | Vertical Flex Vent Kit 4 x 7 inch |
| VIB6A | Vertical Inlet Baffle Kit For 6-5/8 inch diameter. |
| VIB7A | Vertical Inlet Baffle Kit For 7 inch diameter. |

***NOTICE:*** Additional pipe may be required for proper venting.

# SPECIAL VENT SYSTEMS

**The following 4 x 6-5/8 inch vent systems are acceptable for use with the DVCD(32,36,42)FP series fireplaces:**

- Duravent® Pro
- American Metal Products
- Selkirk Direct-Temp®
- Security Secure Vent®
- Excel DV Venting
- Olympia VENTIS®
- Metal Fab Sure Seal®
  - Adapter is required to use this vent Contact Metal Fab
- BDM
- Empire Horizontal Round Termination Kit DVVK-4RE
- Empire Flexvent Kit DVVK-4F
- Empire Flexvent Kit DVVK-4FV Vertical Flex Vent Kit

# FIREPLACE DIMENSIONS

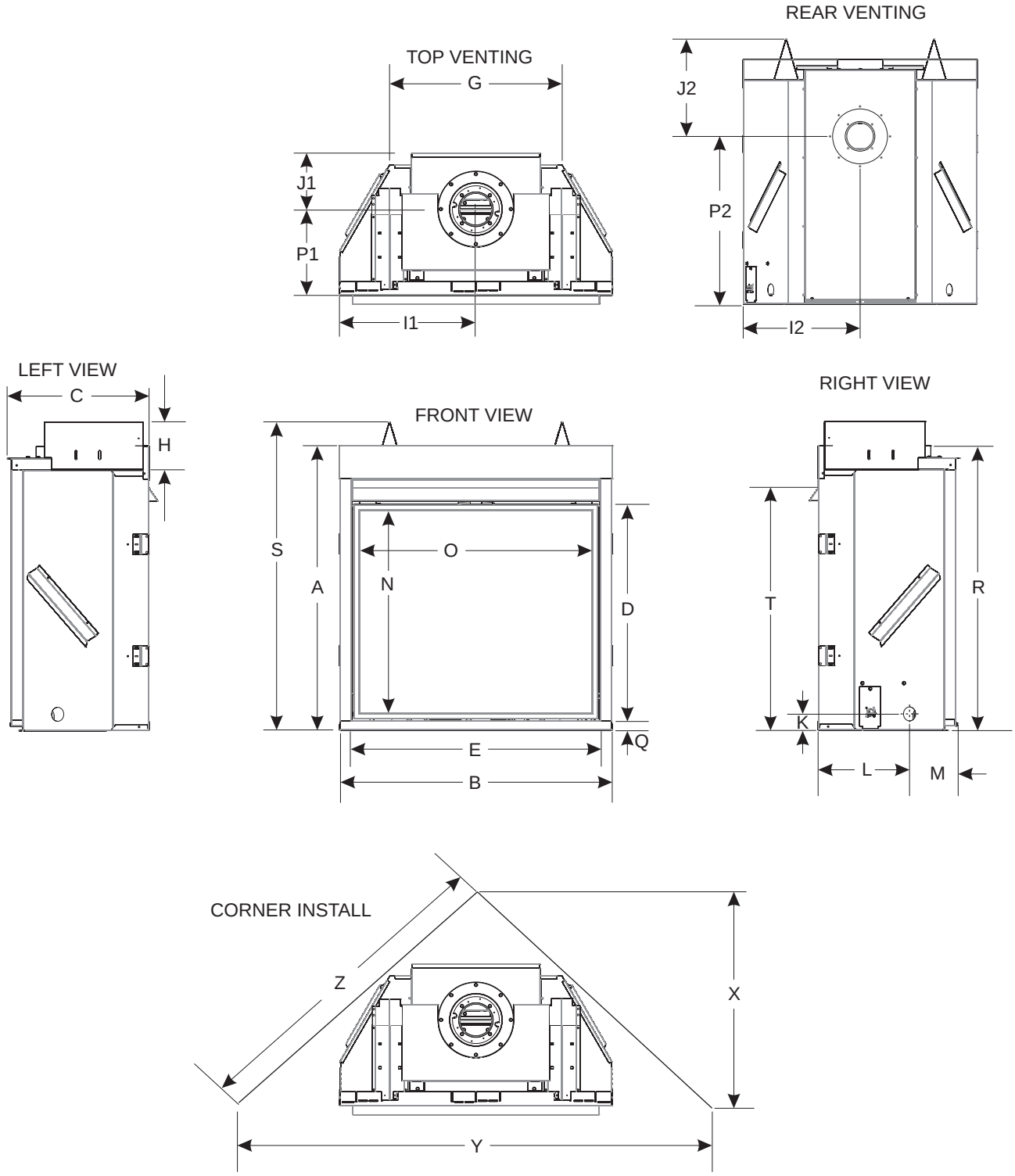


**Figure 3**

# FIREPLACE DIMENSIONS

| INDEX LETTER | DIMENSION DESCRIPTION | DVCD32 | DVCD36 | DVCD42 |
|---|---|---|---|---|
| | | Dimensions in Inches | | |
| A | The maximum height of firebox face (excluding standoffs) | 35-5/8 | 35-5/8 | 37-5/8 |
| B | The maximum width of the firebox face (excluding nailing flanges) | 34-9/16 | 37-9/16 | 43-9/16 |
| C | The maximum depth of the firebox | 17-3/4 | 17-3/4 | 17-3/4 |
| D | The height of the firebox opening | 27-1/2 | 27-1/2 | 29-1/2 |
| E | The width of the firebox opening | 31 | 34 | 40 |
| F | The interior depth of the firebox | 11-7/16 | 11-1/2 | 11-9/16 |
| G | The rear exterior width of the firebox (not shown) | 24-1/8 | 24-9/16 | 30-9/16 |
| H | The height of the firebox standoffs | 6 | 6 | 6 |
| I1 | Width from the left side of the box to the centerline of top vent | 17-5/16 | 18-13/16 | 21-13/16 |
| I2 | Width from the right side of the box to the centerline of rear vent | 17-1/4 | 18-13/16 | 21-13/16 |
| J1 | Depth from back of box to centerline of top vent | 7 | 7 | 7 |
| J2 | Distance from top of standoff to centerline of rear vent | 14-3/16 | 14-3/16 | 14-3/16 |
| K | Height from the bottom of the box to the gas line opening | 2-1/16 | 2-1/16 | 2-1/16 |
| L | Depth from the front of the box to gas line opening | 10 | 10 | 10 |
| M | Depth from rear of box to gas line opening | 6 | 6 | 6 |
| N | Glass height | 20 | 20 | 22 |
| O | Glass width | 27-1/2 | 30-1/2 | 36-1/2 |
| P1 | Depth from front of box to centerline of top vent | 10-3/4 | 10-3/4 | 10-3/4 |
| P2 | Distance from bottom of fireplace to centerline of rear vent | 24-7/16 | 24-3/8 | 26-3/8 |
| Q | Distance from floor to fireplace opening | 1-1/4 | 1-3/16 | 1-3/16 |
| R | Height from floor to vent collar | 35-5/8 | 35-9/16 | 37-5/8 |
| S | Overall height to header | 38-3/4 | 38-3/4 | 40-3/4 |
| T | Weight from floor to top of canopy | 30-3/8 | 30-3/8 | 32-3/8 |
| X | Corner installation depth | 29-11/16 | 29-11/16 | 32-5/8 |
| Y | Corner installation width | 59-3/8 | 59-3/8 | 65-1/4 |
| Z | Corner installation wall length | 42 | 41-7/8 | 46-1/8 |

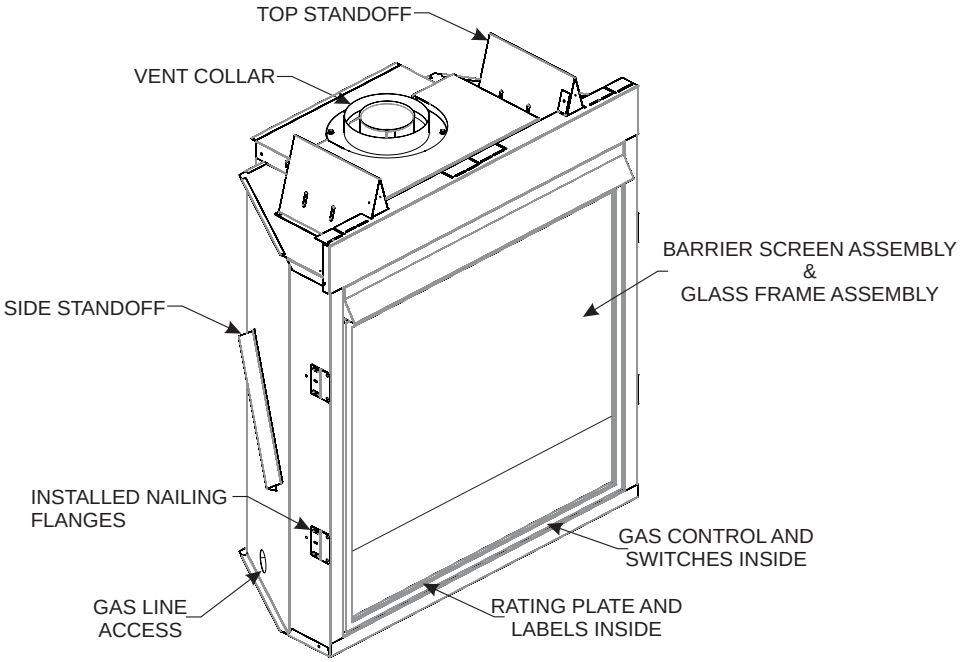


**Figure 4**

# CLEARANCES

| CLEARANCE TO COMBUSTIBLES DIM. IN INCHES | |
|---|---|
| Back | 0 |
| Side | 0 |
| Floor | 0 |
| Top Stand-off | 0 |
| Top Framing Edge | 0 |

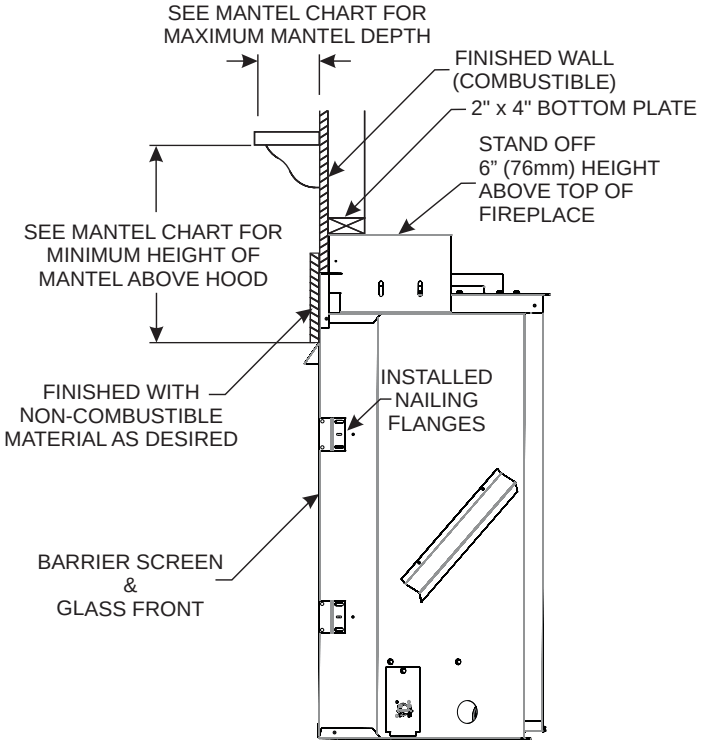


**Figure 5**

***NOTICE:*** **If applicable,** use only non-combustible materials to finish the face of the fireplace.

**Combustible Material**

No greeting cards, stockings or ornamentation of any type should be placed on or attached to the fireplace or its mantel. The flow of heat can ignite combustibles.

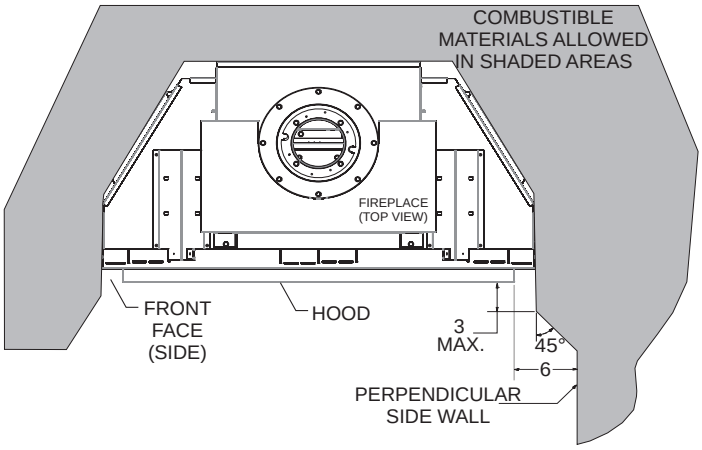


**Figure 6**

**Mantel Chart**

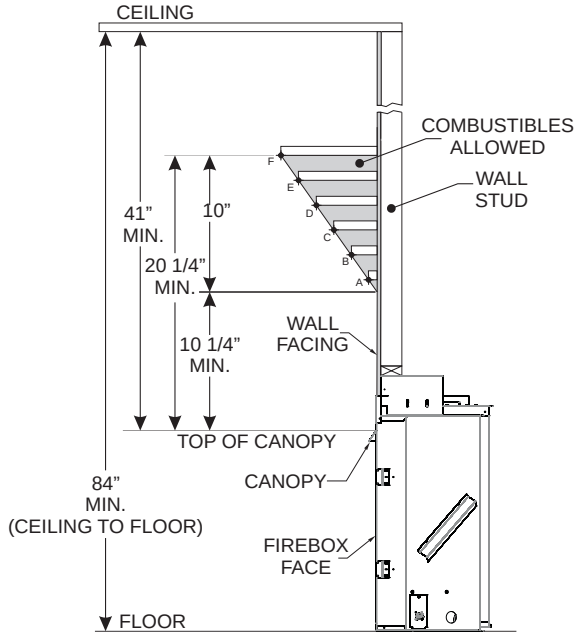


| INDEX LETTER | DISTANCE FROM WALL FACING | DISTANCE FROM TOP OF CANOPY |
|---|---|---|
| | Dimensions in inches | |
| A | 2 | 10-1/4 |
| B | 4 | 12-1/4 |
| C | 6 | 14-1/4 |
| D | 8 | 16-1/4 |
| E | 10 | 18-1/4 |
| F | 12 | 20-1/4 |

**Figure 7**

**Clearances**

Clearance from top of canopy of fireplace to ceiling is 41 inches.
Clearance from side of fireplace to adjacent sidewall is 6 inches.

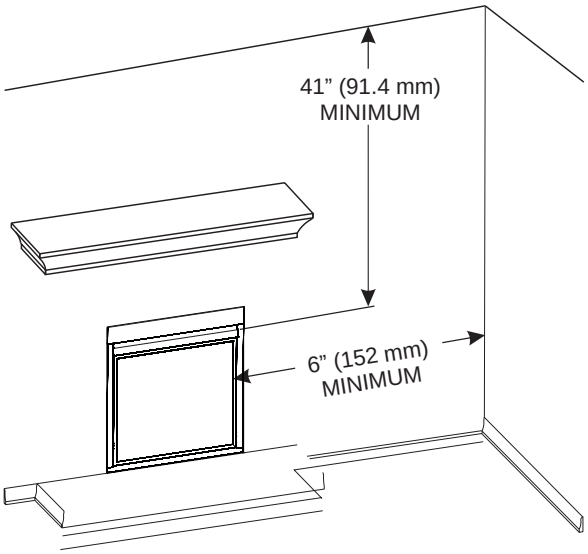


**Figure 8**

# LOCATING FIREPLACE

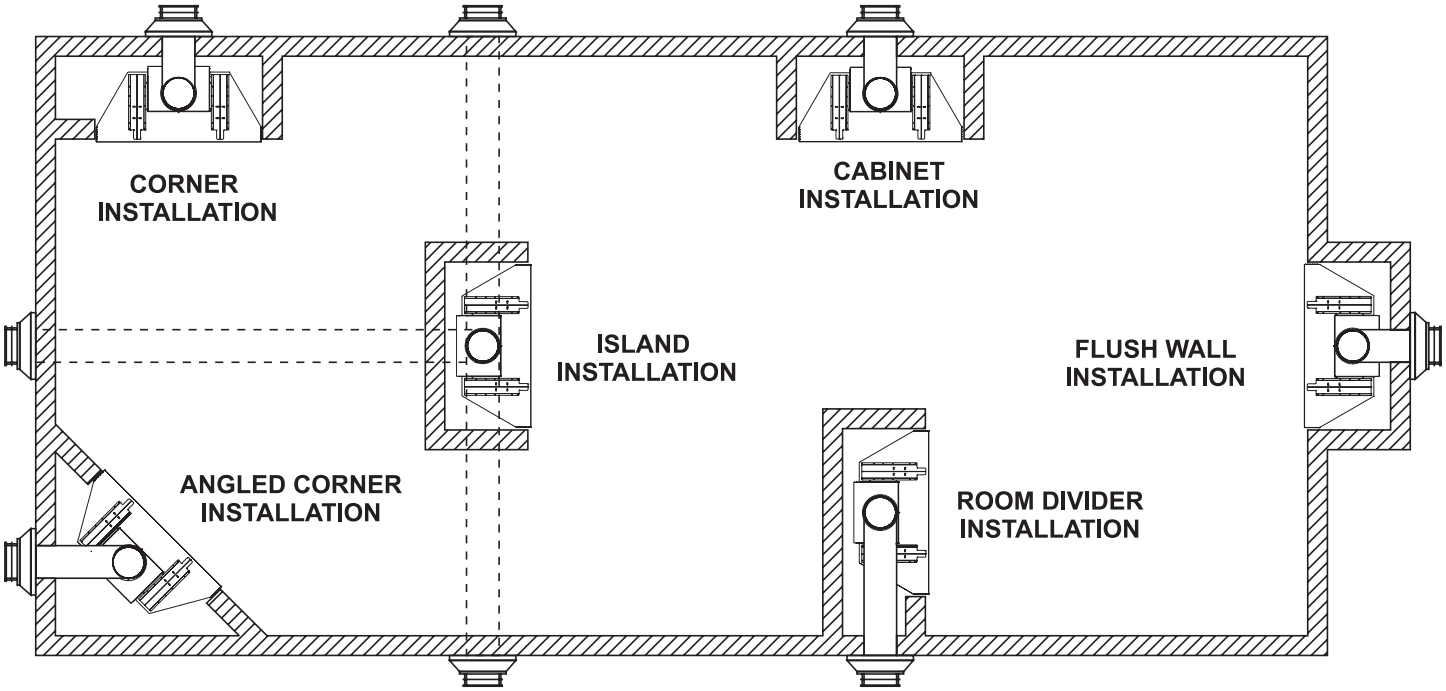


***NOTICE***: Island and room divider installation are possible as long as the horizontal portion of the vent system does not exceed 20 feet with a minimum vertical run of 8 feet. Refer to Venting Section (pages 16 - 27).

Maintain a minimum 6-inch clearance to the perpendicular wall from the front edge of the fireplace.

**Figure 9**

# GAS SUPPLY

The gas pipeline can be brought in through left or right side of the fireplace. Consult the current National Fuel Gas Code, ANSI Z223.1 CAN/CGA-B149 (.1 or .2) installation code.

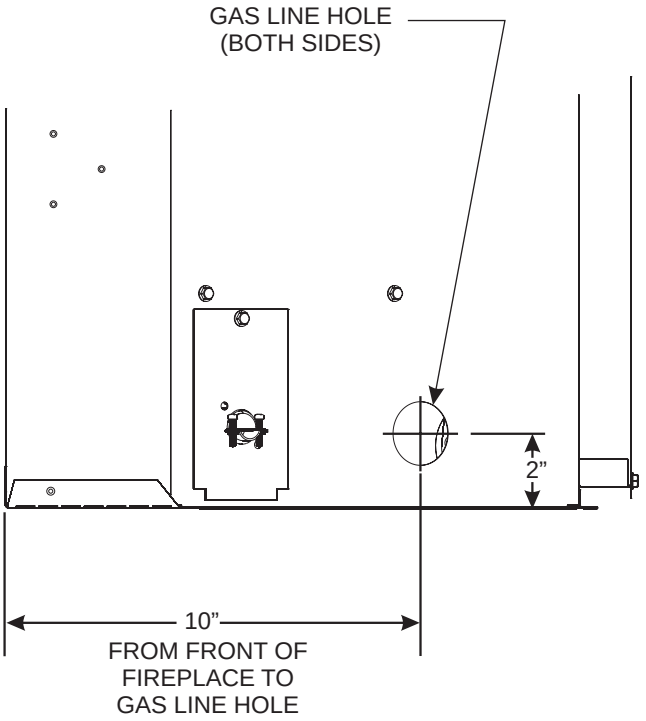


**Figure 10**

| RECOMMENDED GAS PIPE DIAMETER | | | | |
|---|---|---|---|---|
| Pipe Length | Schedule 40 Pipe Inside Diameter | | Tubing, Type L Outside Diameter | |
| | Natural | Propane | Natural | Propane |
| | (Dimensions in inches) | | | |
| 0-10 feet | 1/2 | 3/8 | 1/2 | 3/8 |
| 10-40 feet | 1/2 | 1/2 | 5/8 | 1/2 |
| 40-100 feet | 1/2 | 1/2 | 3/4 | 1/2 |
| 100-150 feet | 3/4 | 1/2 | 7/8 | 3/4 |

***NOTICE***: Check to confirm whether your local codes allow copper tubing or galvanized.
***NOTICE***: Because some municipalities have additional local codes, consult your local authority and installation code.

The use of the following gas connectors is recommended:

— ANSI Z21.24 Appliance Connectors of Corrugated Metal Tubing and Fittings.
— ANSI Z21.45 Assembled Flexible Appliance Connectors of Other Than All-Metal Construction

The above connectors may be used if acceptable by the authority having jurisdiction. The Commonwealth of Massachusetts requires that a flexible appliance connector cannot exceed three feet in length.

FLEXIBLE GAS LINE CONNECTION

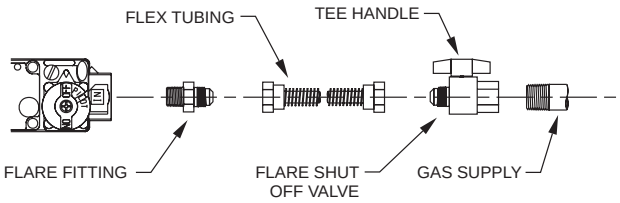


**Figure 11**

Install a gas valve and ground joint union in the gas line upstream of the gas control to aid in servicing. The National Fuel Gas Code requires installing a drip leg near the gas inlet. The drip leg consists of a vertical length of capped pipe installed before the gas inlet to collect condensation and foreign particles. **See Figure 12.**

GAS SUPPLY PIPING

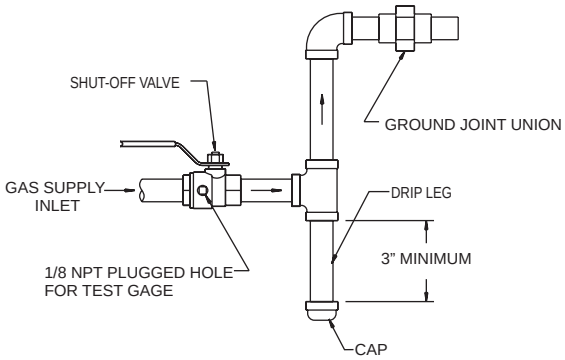


**Figure 12**

**Installing a New Main Gas Supply Shut-off Valve (Check Local Code)**
Each appliance must have its own manual gas shut-off valve located in the vicinity of the fireplace. Where none exists, or where its size or location is not adequate, contact your local authorized installer for replacement or relocation.
Test for leaks. Turn fireplace off. Compounds used on threaded joints of gas piping must be resistant to the action of liquefied petroleum gases. The installer must check all gas connections for leaks. Perform all leak tests with a leak test solution or soap solution. Rinse off all solution once testing is complete. Perform a pressure test on all unexposed connections.
Never use an exposed flame to check for leaks. Never pressure test with fireplace connected; control valve will sustain damage. Disconnect the fireplace from piping at the control valve inlet and cap the pipe before pressure testing.

***NOTICE***: The millivolt gas controls are equipped with a captured screw type pressure test point, therefore it is not necessary to provide a 1/8 inch test point up stream of the control.

Use only approved fittings with copper or flex connectors.

Disconnect the fireplace and its individual shut-off valve from the supply piping system during any pressure testing of that system at test pressures in excess of 1/2 psig (3.5 kPa).
Close the fireplace manual shut off valve to isolate it from the gas supply piping system during any pressure testing of the gas supply piping system at test pressures equal to or less than 1/2 psig (3.5 kPa).

| ⚠ WARNING |
|---|
| **If one of the test procedures results in pressures in excess of 1/2 psig (14 inches w.c.) (3.5 kPa) on the fireplace gas valve, it will result in a hazardous condition.** |

**Checking Manifold Pressures**
Both Propane and Natural gas valves have a built-in pressure regulator in the gas valve. Natural gas models will have a manifold pressure of approximately 3.5 inches w.c. (.871 kPa) at the valve outlet with the inlet pressure to the valve from a minimum of 4.5 inches w.c. (1.120 kPa) for the purpose of input adjustment to a maximum of 14.0 inches w.c. (3.484 kPa). Propane gas models will have a manifold pressure of approximately 10.0 inches w.c. (2.49 kPa) at the valve outlet with the inlet pressure to the valve from a minimum of 10.8 inches w.c. (2.68 kPa) for the purpose of input adjustment to a maximum of 14.0 inches w.c. (3.484 kPa).

| | Gas Supply Pressure (inches w.c.) | | |
|---|---|---|---|
| | **Minimum** | **Normal** | **Maximum** |
| Natural Gas | 4.5 | 7.0 | 14.0 |
| Propane Gas | 10.8 | 11.0 | 14.0 |
| | **Manifold Pressure (inches w.c.)** | | |
| | **Normal (HI)** | | |
| Natural Gas | 3.5 | | |
| Propane Gas | 10.0 | | |

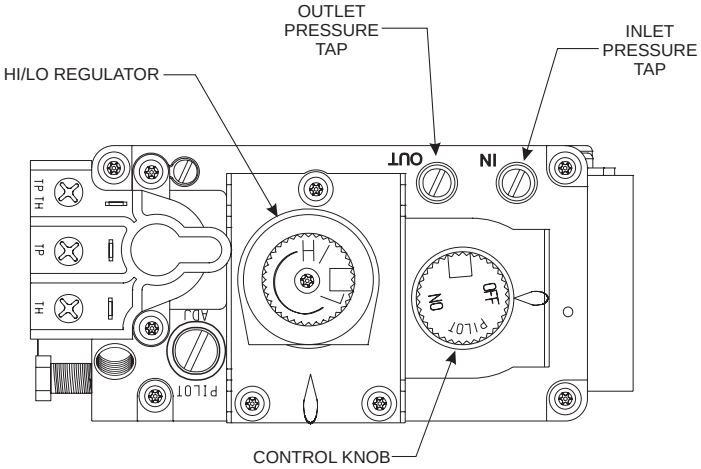

**Figure 13 - Millivolt Valve**

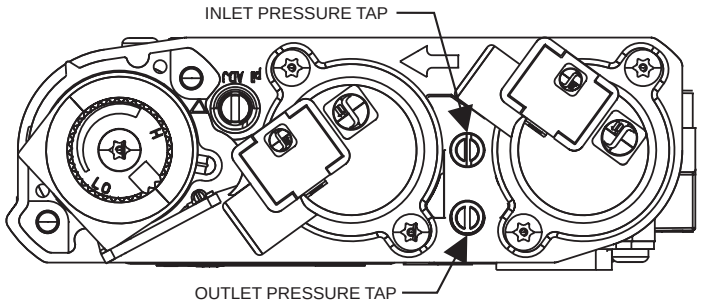

**Figure 14 - IP Valve**

# JUNCTION BOX WIRING (FOR OPTIONAL BLOWER)

## STANDARD MILLIVOLT VALVE MODELS

**⚠ CAUTION**

**All wiring should be done by a qualified electrician and shall be in compliance with all local, city and state building codes. Before making the electrical connection, make sure that the main power supply is disconnected. The fireplace, when installed, must be electrically grounded in accordance with local codes or, in the absence of local codes, with the National Electrical Code ANSI/NFPA 70 (latest edition).**

A factory installed junction box is located on the lower right side of the fireplace. Wiring must be fed to the junction box and attached to the receptacle that is provided. Leave approximately six inches of wire in the junction box for connection.
Attach black wire to one side of the receptacle and white wire to opposite side of receptacle. The ground wire should be attached to the green (ground) screw.
Install the receptacle into the junction box. Attach cover plate.

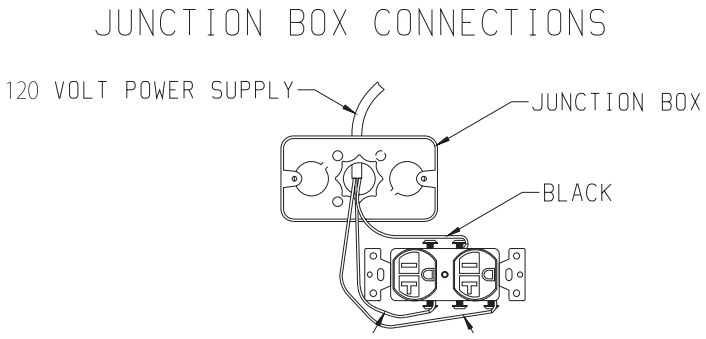


**Figure 15**

# INSTALLATION

The fireplace can be mounted on any of the following surfaces:
1. A flat, hard combustible (burnable) surface.
2. A raised wooden platform.
3. Four corner supports. (Example: Four concrete masonry blocks.) These supports must be positioned so they contact all four perimeter edges on the bottom of the fireplace, if allowed by local codes.

***NOTICE:*** Verify the gas supply and electrical considerations before beginning the framing.

**Framing Information**
Fireplace framing can be built before or after the fireplace is set in place. Posistion framing to accommodate wall covering and fireplace facing material. Construct the fireplace framing with 2 x 4 lumber or heavier. The framing headers or top plate may rest on the fireplace standoffs. Refer to **Figure 16** for minimum framing dimensions.

**⚠ CAUTION**

**Before construction begins, measure fireplace dimensions and verify framing methods and wall covering details.**

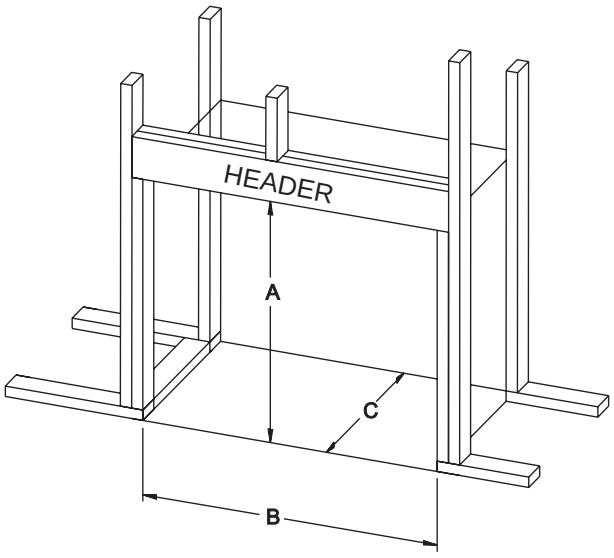


| DIMENSIONS (IN INCHES) | | | |
|---|---|---|---|
| | DVCD32 | DVCD36 | DVCD42 |
| A | 39 | 39 | 41 |
| B | 35-1/4 | 38-1/4 | 44-1/4 |
| C | 18 | 18 | 18 |

**Figure 16**

**Frame the Fireplace Opening**

1. Choose fireplace location.
2. Frame in fireplace opening with a plate across the top. It is important to allow for the finished fireplace face when setting the depth of the frame.

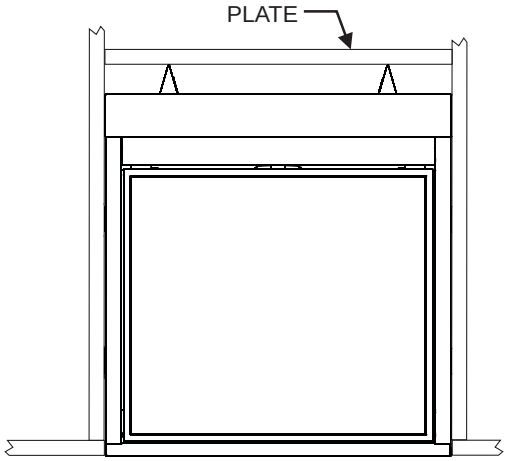


**Figure 17**

3. Bend the nailing flanges 90 degrees.

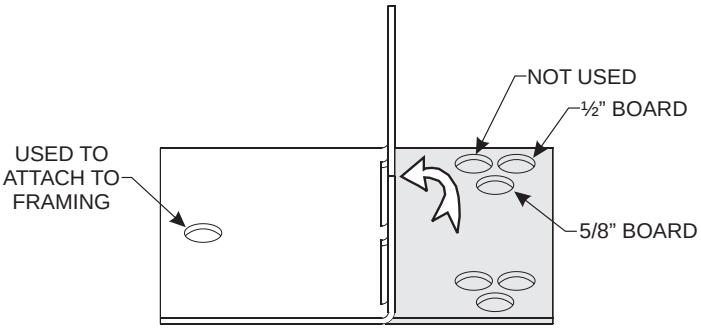


**Figure 18**

4. Attach fireplace to frame using adjustable nailing flanges. Set the nailing flange depth to suit the wall material (adjustable to 1/2 or 5/8 inch).

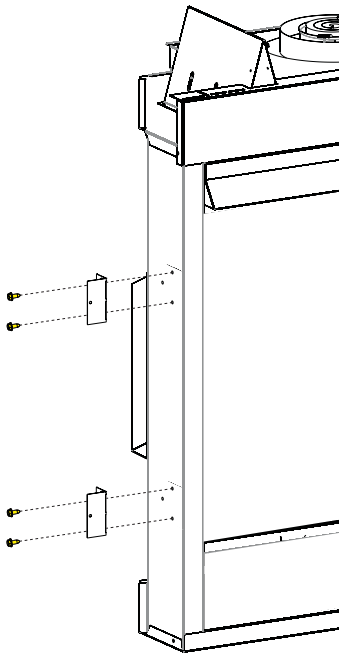

**Figure 19**

5. Secure the nailing flanges to the fireplace with #10 x ½ inch screws (provided).
6. Secure the nailing flanges to the framing with nails or other suitable fasteners (not provided). **See Figure 20.**

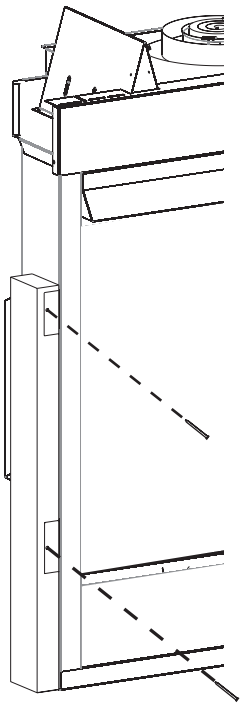

NAIL OR OTHER SUITABLE FASTENER

**Figure 20**

# INSTALLATION (CONT'D)

**Install the Canopy**

1. Retrieve canopy from the opening above the glass door.
2. Place the canopy above the firebox as shown in **Figure 21.**

***NOTICE***: Fireplace heat shield will rest on top of the combustion chamber inside of the open area between the top flue and canopy.

3. Secure the canopy with two #8-18 x 1/2 inch pan head screws provided in the hardware pack. **See Figure 21.**

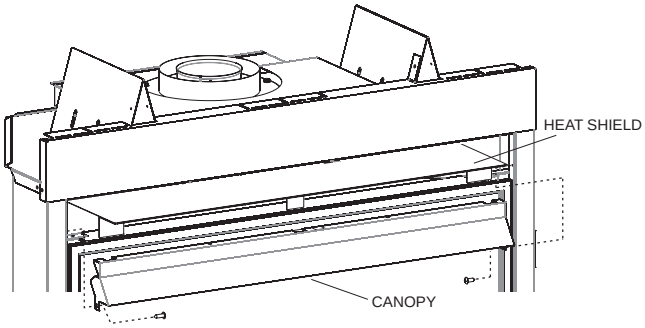


**Figure 21**

**Finishing**

**Figure 7 on page 10** shows the minimum vertical and corresponding maximum horizontal dimensions of mantels or other combustible projections above the top front edge of the fireplace.

Only non-combustible materials may be used to cover the black fireplace face.

**⚠ WARNING**

**Never obstruct or modify face of the fireplace. Improper installation may cause a hazardous situation.**

**⚠ CAUTION**

**A 300°F minimum sealant material must be used if the joints between the finished wall and the fireplace surround (top and sides) are sealed. These joints are not required to be sealed. Only non-combustible material (use if needed), can be applied to the fireplace surround. Consequences: Failure to use the 300°F minimum adhesive may allow the finishing material to fall.**

***NOTICE***: For finishing to top of fireplace, refer to Figure 5, page 10.

# VENT PIPE CLEARANCE

***NOTICE***: Maintain one inch of clearance to combustibles around vertical vent pipe. **See Figure 22.** For horizontal vent systems, maintain a minimum 1-inch clearance from the bottom and sides of the vent to combustibles and a 3-inch clearance above the vent pipe above the vent pipe to combustibles. **See Figures 23 and 24.**

**Cold Climate Installation Recommendation**: Insulate the outer walls to conform with applicable insulation codes if installing this fireplace against a non-insulated exterior wall.

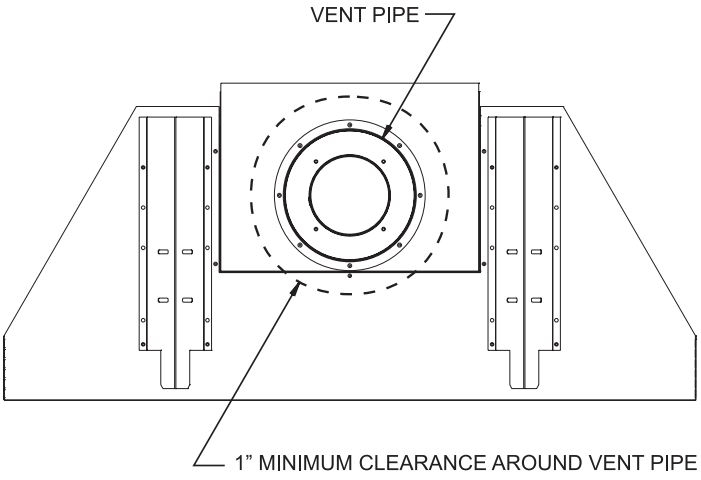


**Figure 22**

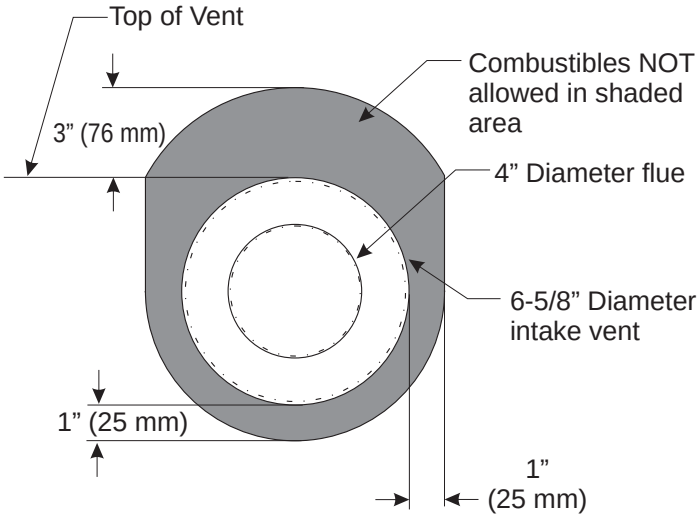


**Figure 23 - Hard Pipe Vent Clearance**

# VENT PIPE CLEARANCE

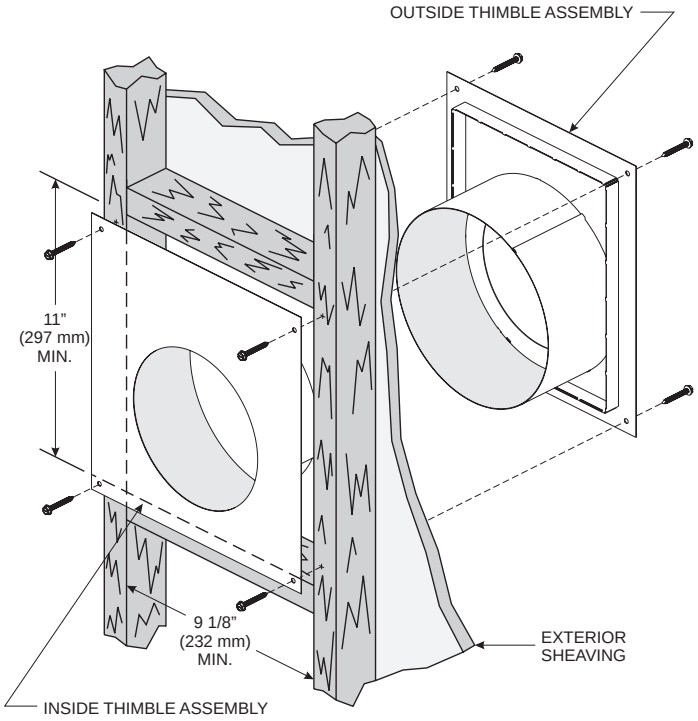


**Figure 24**

**Vertical, 90° Elbow with Horizontal Termination**

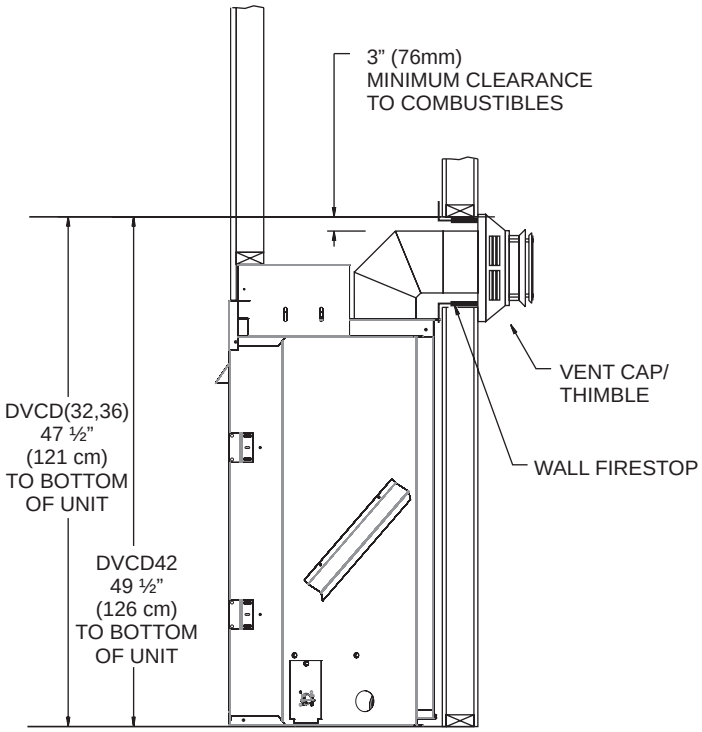


**Figure 25**

**Horizontal Only, Straight Out the Back**

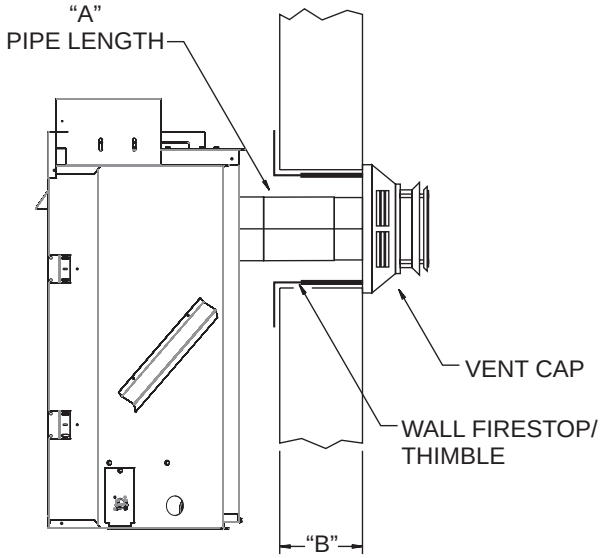


| DIMENSIONS (INCHES) | | Models |
|---|---|---|
| A | B | |
| 6 | 5-1/8 to 6-1/2 | DVCD(32,36,42) |
| 9 | 8-1/8 to 9-1/2 | DVCD(32,36,42) |
| 12 | 11-1/8 to 12-1/2 | DVCD(32,36,42) |

**Figure 26**

# VENT PIPE CLEARANCE

**Vertical, 90° Elbow to Horizontal Out the Wall**

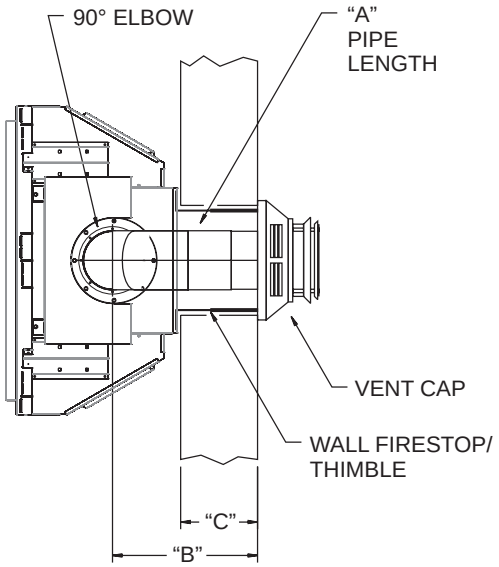


| DIMENSIONS (INCHES) | | |
|---|---|---|
| A | B | C |
| 6 | 11-1/4 to 12-3/4 | 4-3/4 to 6-1/4 |
| 9 | 14-1/4 to 15-3/4 | 7-3/4 to 9-1/4 |
| 12 | 17-1/4 to 18-3/4 | 10-3/4 to 12-1/4 |

**Figure 27**

**Corner Installation Vertical, 90° Elbow to Horizontal Out the Wall**

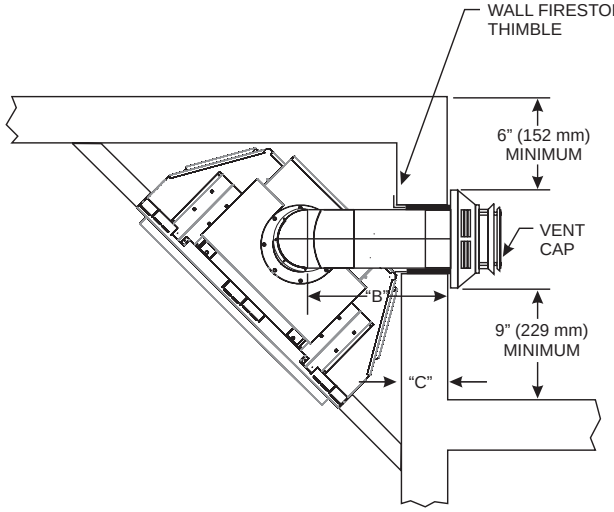


| Dimensions (inches) | | | |
|---|---|---|---|
| B | | | C |
| DVCD32 | DVCD36 | DVCD42 | DVCD(32,36,42) |
| 17-1/16 to 18-9/16 | 18-1/16 to 19-9/16 | 20-3/16 to 21-11/16 | 4-3/4 to 6-1/4 |
| 20-1/16 to 21-9/16 | 21-1/16 to 22-9/16 | 23-3/16 to 24-11/16 | 7-3/4 to 9-1/4 |
| 23-1/16 to 24-9/16 | 24-1/16 to 25-9/16 | 26-3/16 to 27-11/16 | 10-3/4 to 12-1/4 |

**Figure 28**

**Corner Installation Horizontal, 45° Elbow to Horizontal Out the Wall**

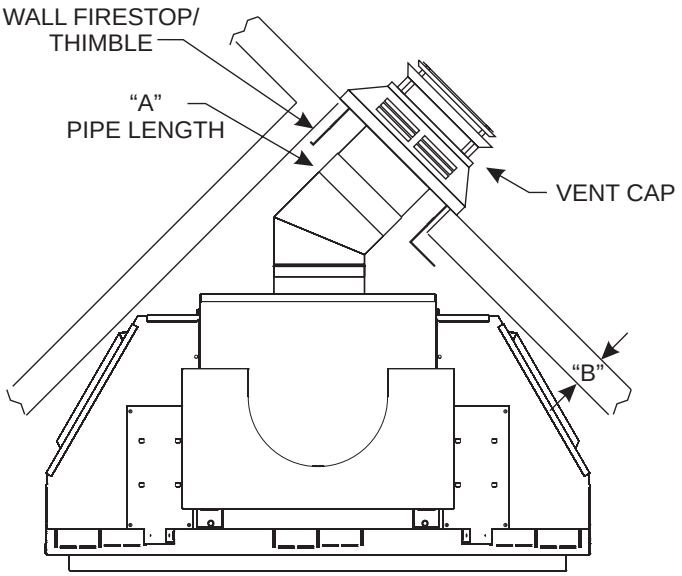


| Reference Letter | DVCD32 | DVCD36 | DVCD42 |
|---|---|---|---|
| | Dimension (inches) | | |
| A | B | B | B |
| 6 | 4 to 5-1/2 | 4 to 5 | N/A |
| 9 | 6 to 7-1/2 | 6 to 7-1/2 | 4 to 5-1/2 |
| 12 | 9 to 10-1/2 | 9 to 10-1/2 | 9 to 10-1/2 |

**Figure 29**

# VENTING FIREPLACE - TOP

**To Use the Vent Graph**

1. Determine the height of the center of the horizontal vent pipe. Using this dimension on the Sidewall Vent Graph, locate the point it intersects with the slanted graph line.
2. From the point of this intersection, draw a vertical line to the bottom of the graph.
3. Select the indicated dimension, and position the unit in accordance with same.

**EXAMPLE A:**
If the vertical dimension from the floor of the unit is 35 feet, the horizontal run to the outer wall flange must not exceed 6.5 feet.

**EXAMPLE B:**
If the vertical dimension from the floor of the unit is 6.5 feet, the horizontal run to the outer wall flange must not exceed 14.5 feet.

**SPECIAL NOTE:** For each 45 degree elbow installed in the horizontal run, the length of the horizontal run MUST be reduced by 18" (457 mm). This does not apply if the 45 degree elbows are installed on the vertical part of the vent system. Reduce 3' for every 90° elbow.

**Example:** According to the chart the maximum horizontal vent length is 20' and if two 45 degree elbows are required in the horizontal vent it must be reduced to 17'.

The maximum number of 45 degree elbows permitted per side wall installation is two (2). These elbows can be installed in either the vertical or horizontal run.

***NOTICE*:** The first elbow off the top of the fireplace is figured into the chart.

**Venting Graph (Dimensions in Feet)**

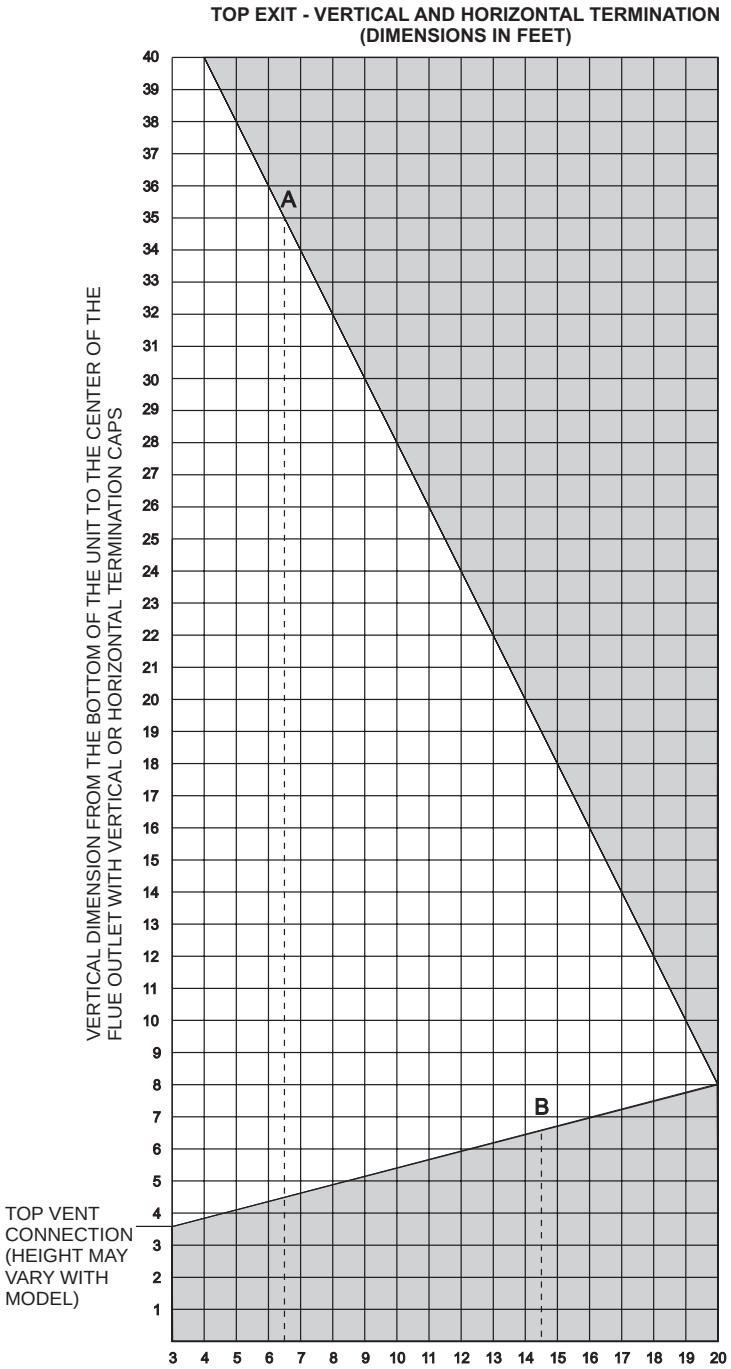


Acceptable vertical and horizontal vent run.
(40' maximum vertical and 20' maximum horizontal)

Unacceptable vertical and horizontal vent run.

**Figure 30**

# VENTING FIREPLACE - TOP

**Below Grade Installation**
Empire recommends installing a snorkel kit when it is not possible to meet the required vent terminal clearances of 12 inches (305 mm) above grade level. A snorkel kit allows an installation depth down to 7 inches (178 mm) below grade level. The 7 inches (178 mm) is measured from the center of the horizontal vent pipe as it penetrates through the wall.
**Ensure the sidewall venting clearances are observed. Empire recommends installing a window well with adequate and proper drainage around the termination area if the venting system is installed below ground.**

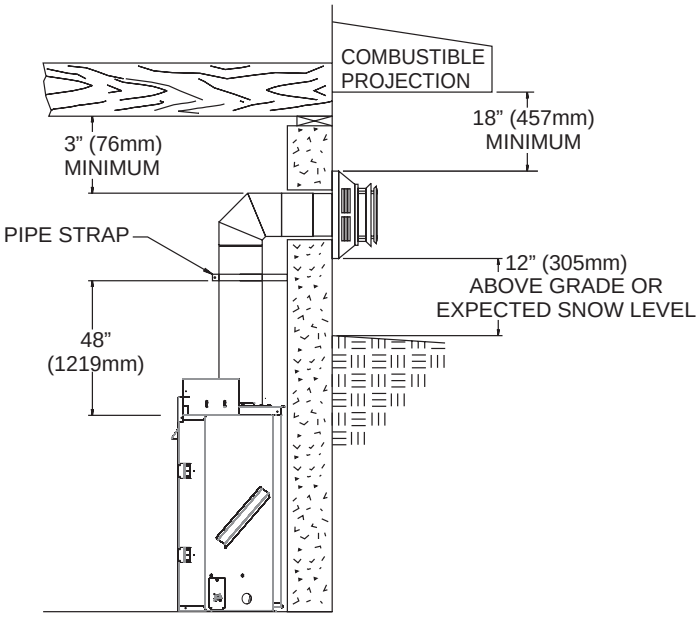


TYPICAL BASEMENT INSTALLATION
**Figure 31**

| ATTENTION |
| --- |
| **Vinyl Soffit, Vinyl Ceiling, Vinyl Overhang Disclaimer** Clearances are to heat resistant material (i.e. wood, metal). This does not include vinyl. Empire Comfort Systems will not be held responsible for heat damage caused from terminating under vinyl overhangs, vinyl ceilings or vinyl ventilated/unventilated soffits. |

**Example of possible venting systems using one 90° elbow.**
Eight feet is listed as minimum vertical vent run with 20 feet of maximum horizontal vent run. Vertical dimensions are based on centerline to centerline of pipe. Horizontal dimensions are based on centerline of pipe to end of termination.

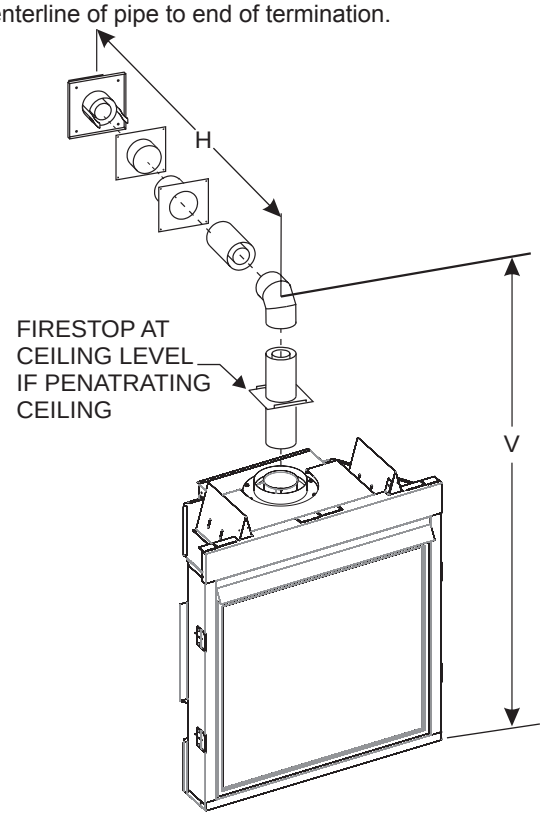


SEE GRAPH FOR PERMISSIBLE “H” AND “V” DIMENSIONS
**Figure 32**

**Example of possible venting systems using two 90° elbows.**
V is listed as minimum vertical dimensions and H1 + H2 is listed as total of maximum horizontal dimensions. The maximum vertical and horizontal distances for two 90° elbows as shown in Figure 33 is 20 feet (6.1 m).
Attention: Refer to Figure 30 for additional venting requirements.

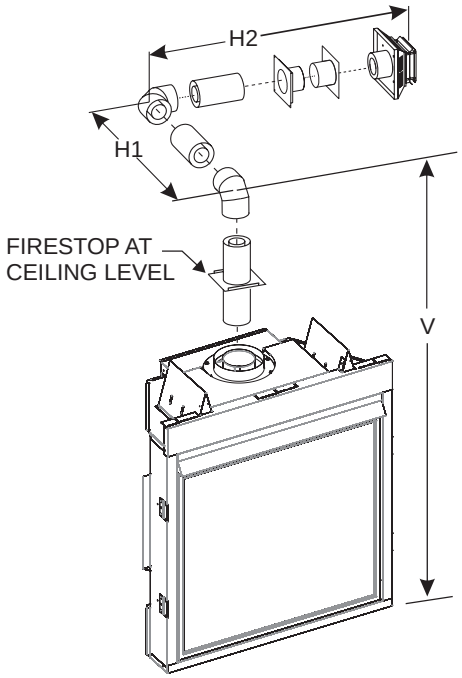


SEE GRAPH FOR PERMISSIBLE "H" AND "V" DIMENSIONS
NOTE: H1 AND H2 MUST BE ADDED TOGETHER TO USE CHART

**Figure 33**

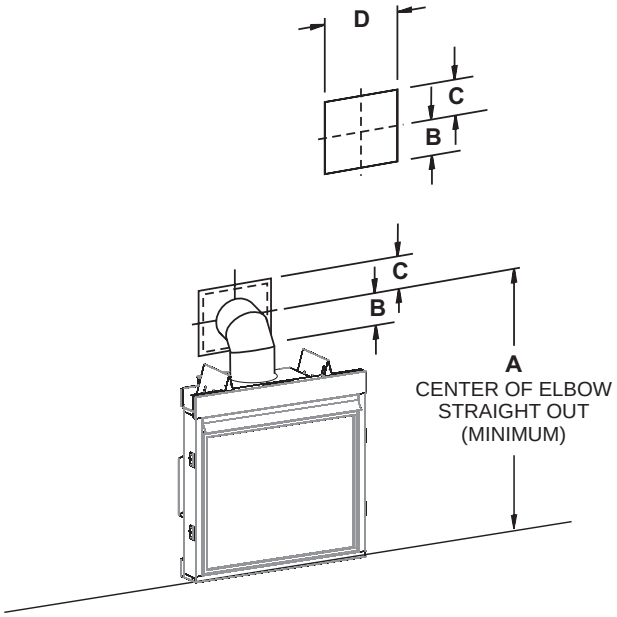


| FIREPLACE SERIES | HARD ELBOW Dimensions (inches) | | | |
|---|---|---|---|---|
| | A | B | C | D |
| DVCD32FP | 41-1/2 | 4-1/2 | 6-1/2 | 9-1/8 |
| DVCD36FP | 41-1/2 | 4-1/2 | 6-1/2 | 9 1/8 |
| DVCD42FP | 43-1/2 | 4-1/2 | 6-1/2 | 9 1/8 |

| FIREPLACE SERIES | FLEX PIPE 90 DEGREE BEND Dimensions (inches) | | | |
|---|---|---|---|---|
| | A | B | C | D |
| DVCD32FP | 43 | 4-1/2 | 6-1/2 | 9-1/8 |
| DVCD36FP | 43 | 4-1/2 | 6-1/2 | 9-1/8 |
| DVCD42FP | 45 | 4-1/2 | 6-1/2 | 9-1/8 |

Minimum hole location dimensions for through the wall horizontal installations with 90 degree elbow off top of fireplace.

**Figure 34**

**Position the Fireplace**
If possible, position the fireplace so the direct vent termination will be centered between two studs. This will avoid any extra framing. All vent kit pipes should be assembled on the fireplace after the fireplace is moved into the final position.

**Cut the Hole**
The hole through the exterior wall of the house can be cut after the fireplace has been positioned in its permanent location. This hole must be 11 inches high x 9-1/2 inches wide with its center line determined by the amount of vertical rise and horizontal run of the termination. **See Figure 34 on page 21.** The bottom of the cap must be 12 inches above the ground level, and top of the cap must be no less than 18 inches below a combustible projection, and no closer than 9 inches to any wall running parallel to vent termination. See Figure 35.

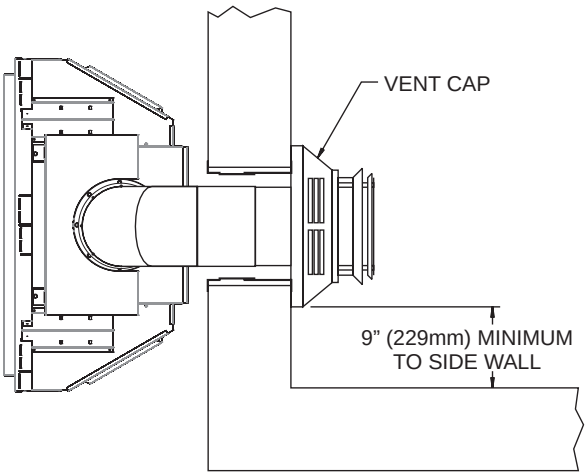


**Figure 35**

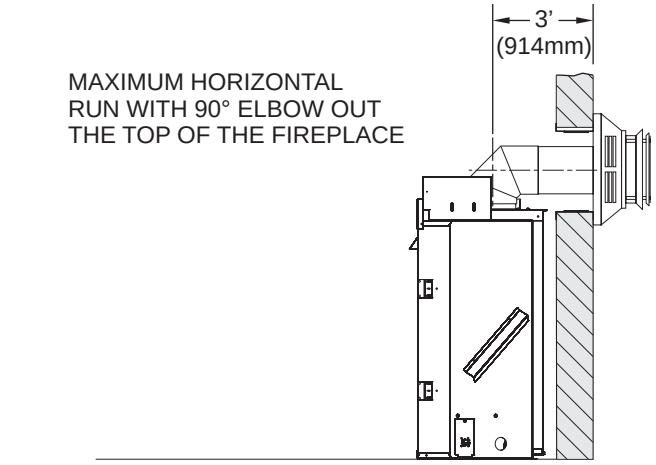


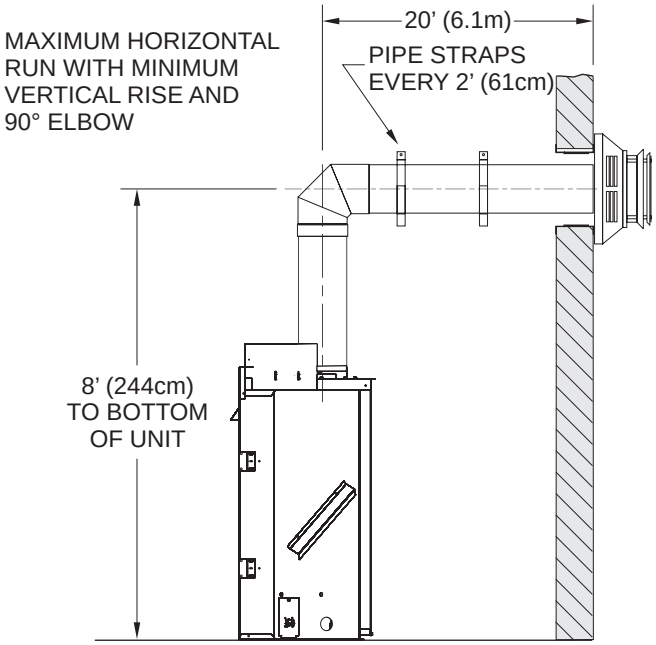


(NOTE: STANDOFFS REMOVED FOR CLARITY)

**Figure 36**

# VENTING FIREPLACE - TOP (EXAMPLES)

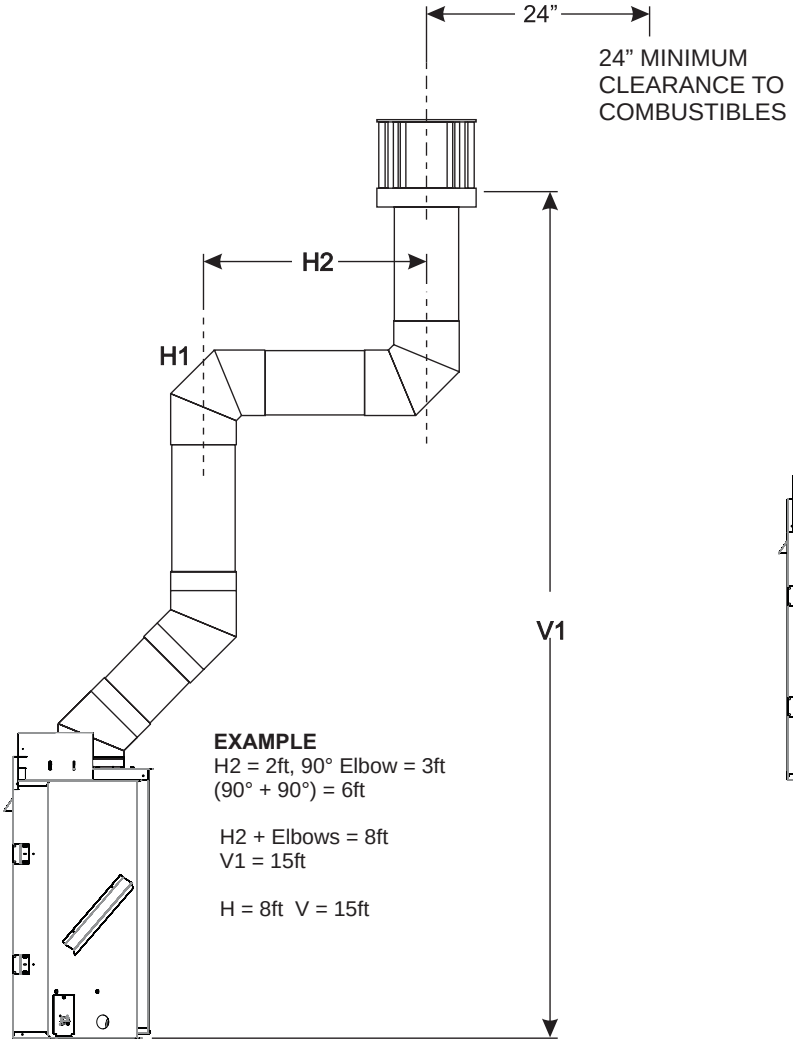


**Figure 37**

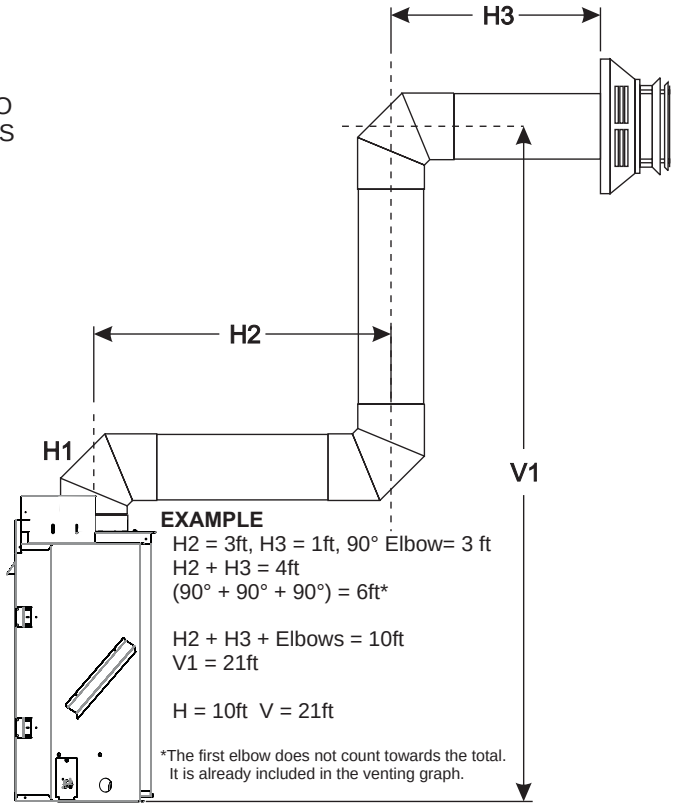


**Figure 38**

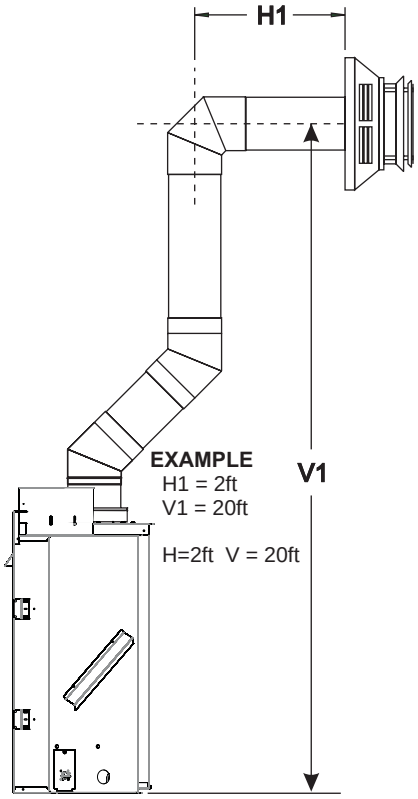


**Figure 39**

# VENTING FIREPLACE - REAR

**To Use the Vent Graph**

1. Determine the height of the center of the horizontal vent pipe. Using this dimension on the Sidewall Vent Graph, locate the point it intersects with the slanted graph line.
2. From the point of this intersection, draw a vertical line to the bottom of the graph.
3. Select the indicated dimension, and position the unit in accordance with same.

**EXAMPLE A:**
If the vertical dimension from the floor of the unit is 12 feet, 4 inches the horizontal run to the outer wall flange must not exceed 12 feet, 3 inches.

**EXAMPLE B:**
If the vertical dimension from the floor of the unit is 6 feet, 9 inches, the horizontal run to the outer wall flange must not exceed 6 feet, 6 inches.

**SPECIAL NOTE:** For each 45 degree elbow installed in the horizontal run, the length of the horizontal run MUST be reduced by 18 inches (457 mm). This does not apply if the 45 degree elbows are installed on the vertical part of the vent system. Reduce three feet for every 90° elbow.

**Example:** According to the chart the maximum horizontal vent length is 20 feet and if two 45 degree elbows are required in the horizontal vent it must be reduced to 17 feet.

The maximum number of 45 degree elbows permitted per side wall installation is two. These elbows can be installed in either the vertical or horizontal run.

***NOTICE:*** When rear venting unit, adjust air shutter according to the table below.

☐ Acceptable vertical and horizontal vent run.

■ Unacceptable vertical and horizontal vent run.

| AIR SHUTTER OPENINGS (DIMENSIONS IN INCHES) | | | |
|---|---|---|---|
| **Model** | **Top Venting** | **Rear Venting** | **Gas Type** |
| DVCD32 | 1/16 | 1/8 to 3/16 | Natural |
| DVCD36 | 1/16 | 1/8 to 3/16 | Natural |
| DVCD42 | 3/16 | 1/4 to 5/16 | Natural |
| DVCD32 | 1/4 | 5/16 to 3/8 | Propane |
| DVCD36 | 5/16 | 3/8 to 7/16 | Propane |
| DVCD42 | 5/16 | 3/8 to 7/16 | Propane |

**Table 1**

## Venting Graph (Dimensions in Feet)

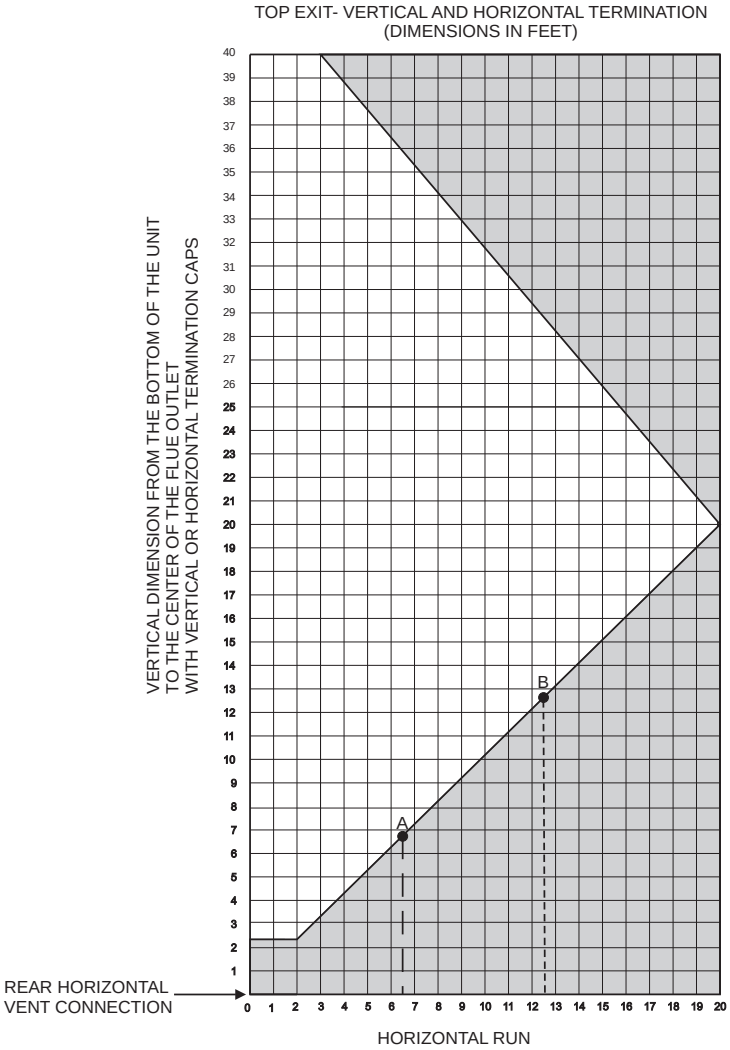


***NOTICE:*** When rear venting unit, adjust air shutter according to the requirements in **Table 1**.

Adjust air shutter from 1/4" open to between 5/16" and 3/8" for Propane Gas.

**Figure 40**

# VENTING FIREPLACE - REAR (EXAMPLES)

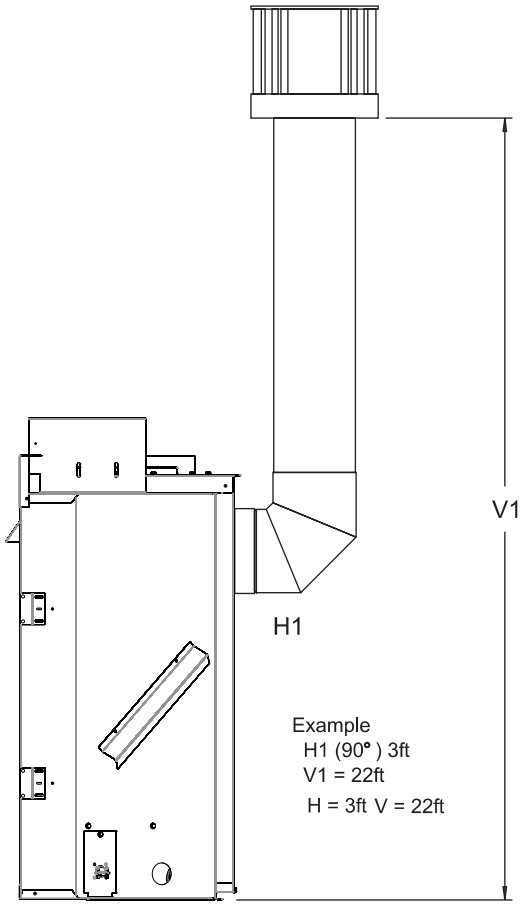


**Figure 41**

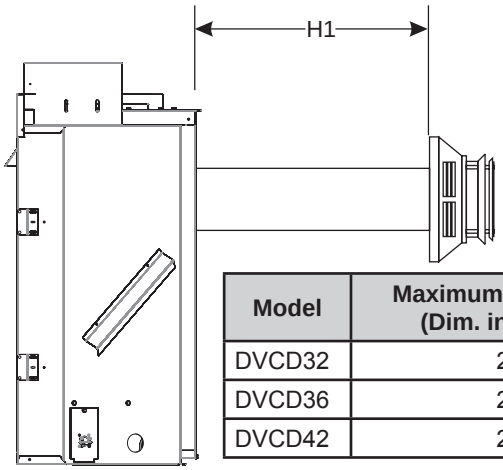


| Model | Maximum Length H1 (Dim. in inches) |
|---|---|
| DVCD32 | 24 |
| DVCD36 | 24 |
| DVCD42 | 24 |

**Figure 43**

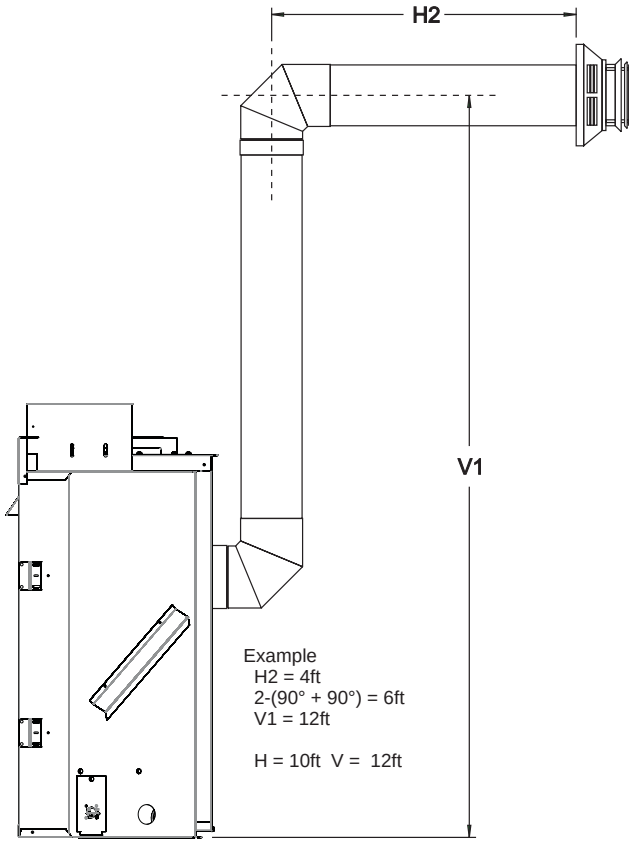


**Figure 44**

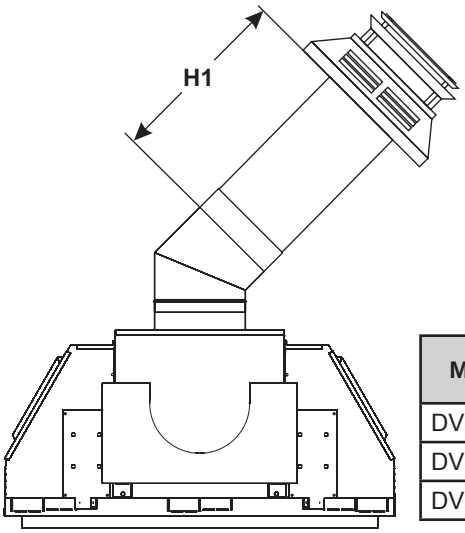


**TOP VIEW**

**Figure 42**

| Model | Maximum Length H1 (Dim. in inches) |
|---|---|
| DVCD32 | 24 |
| DVCD36 | 24 |
| DVCD42 | 18 |

# REAR VENT CONVERSION

**Convert flue take-off to rear venting**
When switching out the flue and inlet vent collars to run horizontally off the rear vent, the following steps must be taken.

1. Remove the inlet vent collar (eight #10 hex head screws) and flue collar (four #10 hex head screws) from the top of the fireplace. Retain vent and flue collars and hardware for re-installation.
2. Remove the inlet vent cover plate and flue cover plate from the rear of the fireplace.
3. Insert the insulation retainer bracket and flue insulation into the top flue pipe before reinstalling the flue cover plate over the top flue with four#10 hex head screws.
4. Re-install the inlet vent cover plate over the top inlet opening with eight #10 hex head screws. **See Figure 45.**
5. Install the flue collar assembly to the rear flue with four #10 hex head screws removed in Step 1.
6. Install the inlet vent collar to the rear of the fireplace with the eight #10 hex head screws removed in Step 1.
7. This completes the conversion for a rear vent application.

| ATTENTION |
|---|
| • Discard insulation and retainer when venting off top of fireplace.<br>• Pull the flue cover plate tab outward prior to removal. This will ensure the plate does not drop inside the rear air chamber. |

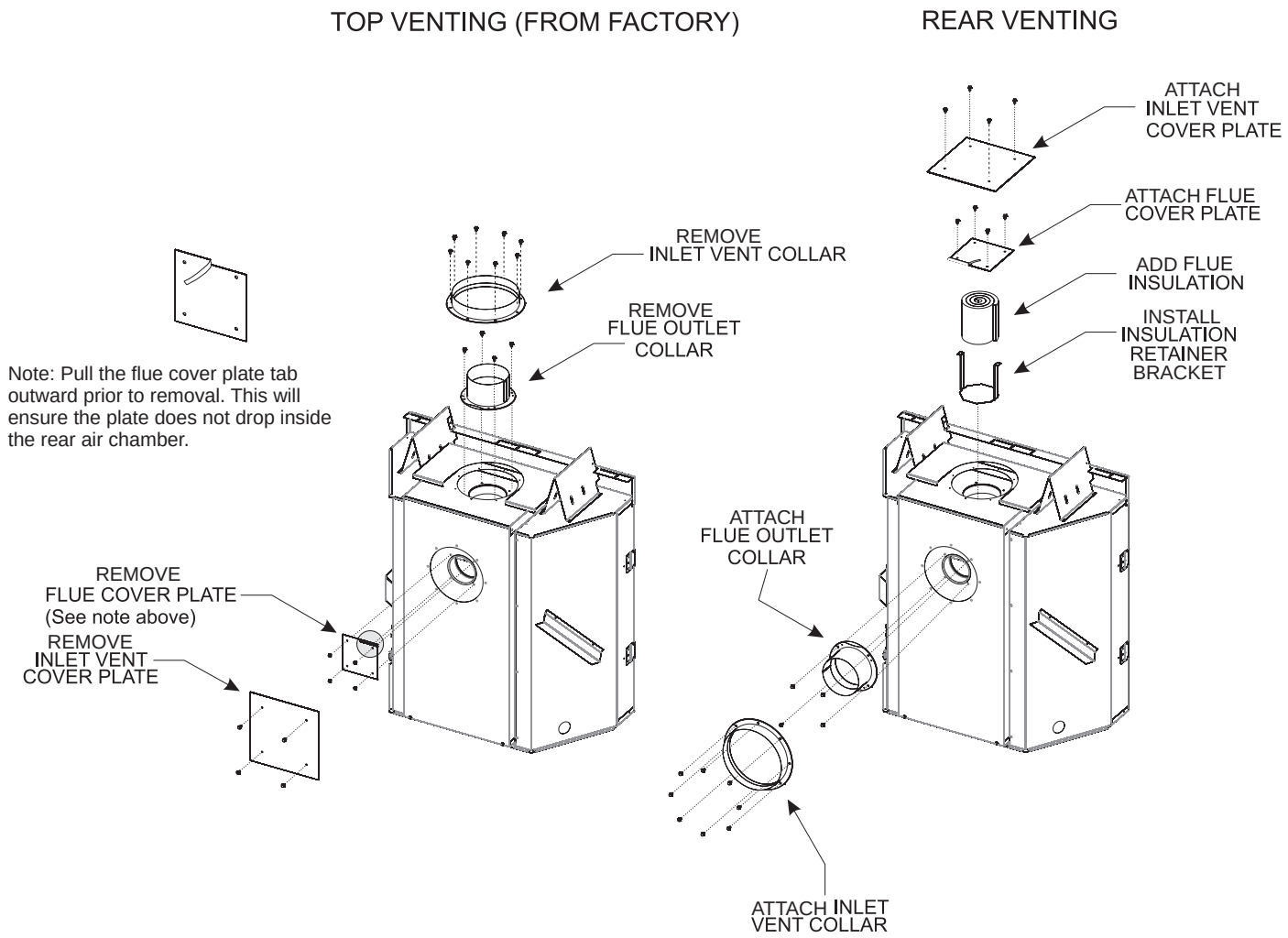


**Figure 45**

# VENT CLEARANCES

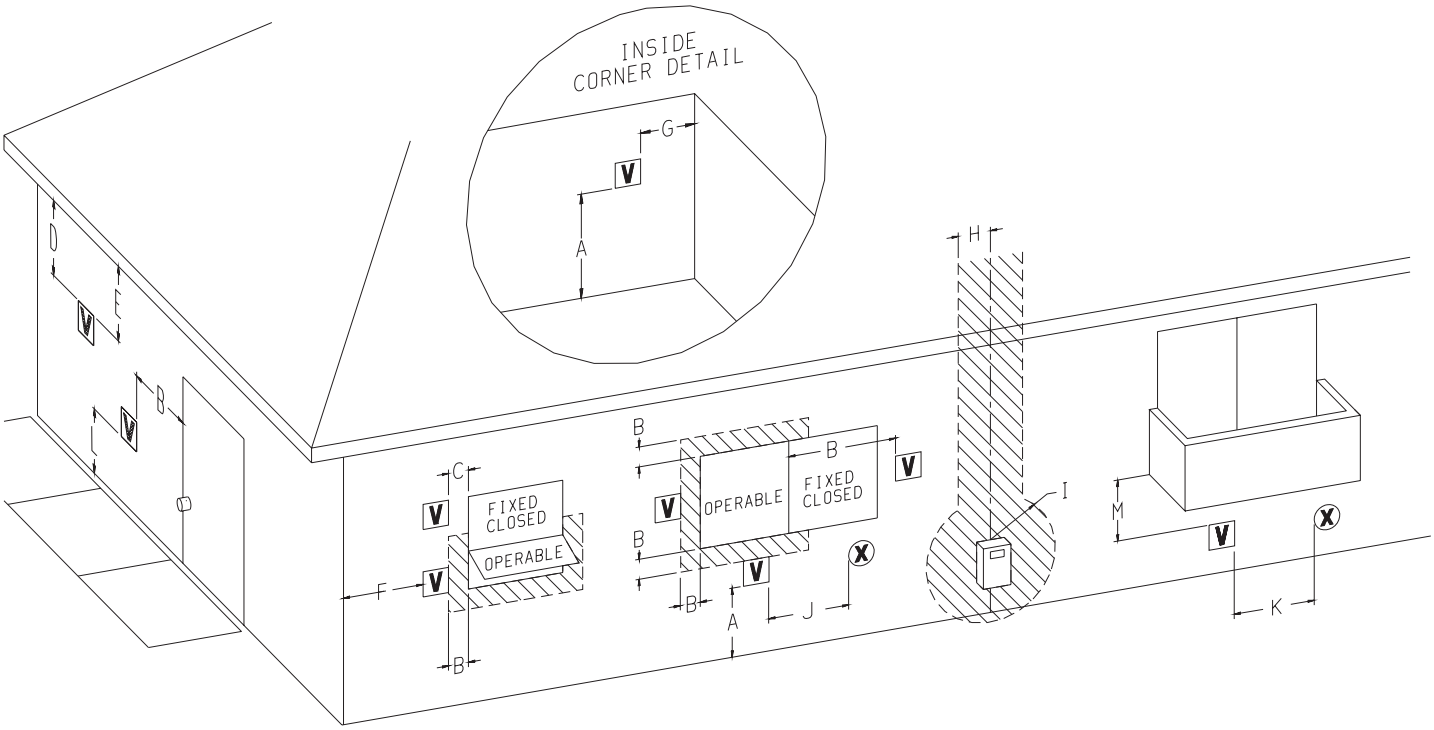


V VENT TERMINAL  X AIR SUPPLY INLET  AREA WHERE TERMINAL IS NOT PERMITTED

| | Canadian Installations1 | US Installations2 |
|---|---|---|
| A= Clearance above grade, veranda, porch, deck, or balcony | 12 in (30 cm) | 12 in (30cm) |
| B= Clearance to window or door that may be open | 12 in (30 cm) for appliances > 10,000 Btuh (3 kW) and ≤ 100,000 Btuh (30 kW) | 9 in (23 cm) for appliances > 10,000 Btuh (3 kW) and ≤ 50,000 Btuh (15 kW) |
| C= Clearance to permanently closed window | 12 in (30 cm) | 12 in (30 cm) |
| D= Vertical clearance ventilated soffit located above the terminal within a horizontal distance of 2 feet (61 cm) from the center line of the terminal | 18 in (45 cm) | 18 in (45 cm) |
| E= Clearance to unventilated soffit | 12 (30 cm) | 12 (30 cm) |
| F= Clearance to outside corner | See page 30 | See page 30 |
| G= Clearance inside corner | See page 30 | See page 30 |
| H= Clearance to each side of center line extended above meter/regulator assembly | 3 ft (91 cm) within a height 15 ft (4.5 m) above the meter/regulator assembly | 3 ft (91 cm) |

**ATTENTION**

**Vinyl Soffit, Vinyl Ceiling, Vinyl Overhang Disclaimer**
Clearances are to heat resistant material (i.e. wood, metal). This does not include vinyl. Empire Comfort Systems will not be held responsible for heat damage caused from terminating under vinyl overhangs, vinyl ceilings or vinyl ventilated/unventilated soffits.

| | Canadian Installations1 | US Installations2 |
|---|---|---|
| I= Clearance to service regulator vent outlet | 3 ft (91 cm) | 3 ft (91 cm) |
| J= Clearance to nonmechanical air supply inlet to building or the combustion air inlet to any other appliance | 12 in (30 cm) for appliances > 10,000 Btuh (3 kW) and ≤ 100,000 Btuh (30 kW) | 9 in (23 cm) for appliances > 10,000 Btuh (3 kW) and ≤ 50,000 Btuh (15 kW) |
| K= Clearance to a mechanical air supply inlet | 6 ft (1.83 m) | 3 ft (91 cm) above if within 10 ft (3 m) horizontally |
| L= Clearance above paved sidewalk or paved driveway located on public property | 7 ft (2.13 m) † | 7 ft (2.13 m) |
| M= Clearance under veranda, porch deck, or balcony | 12 in (30 cm) ‡ | 12 in (30 cm) |

| | |
|---|---|
| 1 | In accordance with the current CSA B149.1, Natural Gas and Propane Installation Code |
| 2 | In Accordance with the current ANSI Z223.1/NFPA 54, National Fuel Gas Code |
| † | A vent shall not terminate directly above a sidewalk or paved driveway that is located between two single family dwellings and serves both dwellings |
| ‡ | Permitted only if veranda,, porch, deck, or balcony is fully open on a minimum of two sides beneath the floor. |

For clearances not specified in ANSI Z223.1/NFPA 54 or CSA B149.1: Clearance must be in accordance with local installation codes and the requirements of the gas supplier.

**Install Support Brackets**

A horizontal pipe support MUST BE used for each 3 feet of horizontal run. Place the pipe supports around the pipe and nail in place to framing members. There MUST BE a 3-inch clearance to combustibles above 6-5/8 inch diameter pipe and elbows and 1-inch clearance on both sides and bottom of 6-5/8 inch pipe to combustibles on all horizontal pipe sections and elbows. Support vertical runs of this vent system every 4 feet above the fireplace flue outlet with wall brackets attached to the 6-5/8 inch vent pipe and secure with nails or screws to structural framing members.

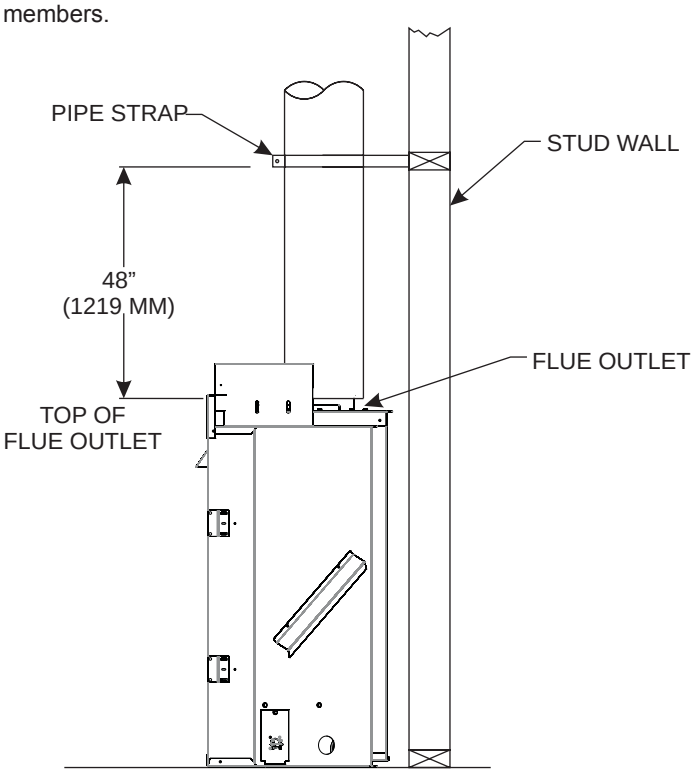


**Figure 46**

**Install Firestops**

Firestops are required for safety whenever the vent system passes through an interior wall, an exterior wall, or a ceiling. These firestops act as a firebreak heat shield and as a means to insure that minimum clearances are maintained to the vent system.

**Horizontal Firestops**

Horizontal runs in the vent system which pass through either interior or exterior walls, require the use of wall firestops on both sides of the wall through which the vent passes.

Position the firestops on both sides of the framed hole previously cut. **See Figure 47.** Secure firestop with nails or screws. Continue the vent run through the firestops.

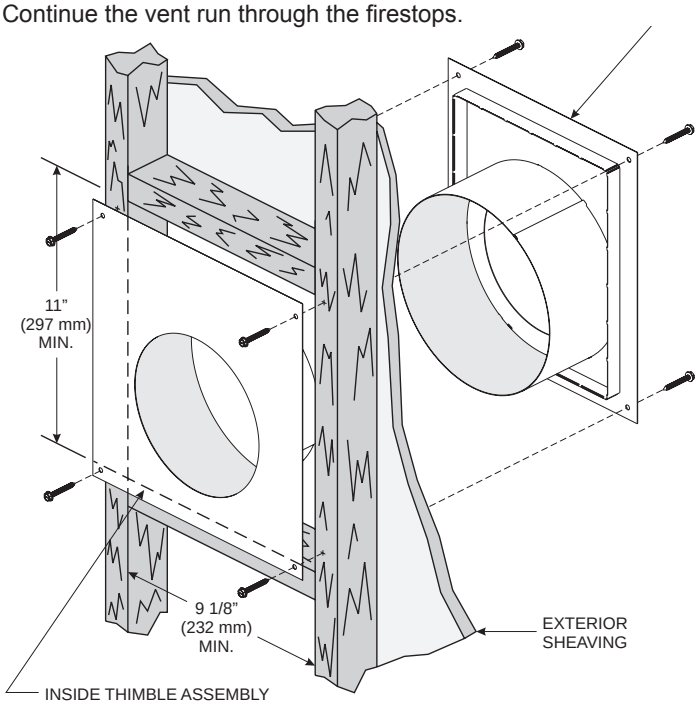


**Figure 47**

**Vertical Firestops**

Vertical runs require the use of one ceiling firestop at each ceiling hole through which the venting passes.

Position a plumb bob directly over the center of the vertical vent component and mark the ceiling to establish the center point of the vent. Drill a hole or drive a nail through this center point and check the floor above for any obstructions such as wiring or plumbing runs. Reposition the fireplace and vent system if necessary to accommodate ceiling joists and/or obstructions.

Cut a 10 inch x 10 inch hole through the ceiling, using the center point previously marked. Frame the hole with framing lumber the same size as the ceiling joists. **See Figure 48.** If the area above the ceiling is NOT an attic, position and secure the ceiling firestop on the ceiling side of the previously cut and framed hole. **See Figure 49.** If the area above the ceiling is an attic, position and secure the firestop on top of the previously framed hole. **See Figure 50.**

***NOTICE***: Remove insulation from the framed area in the attic before installing the firestop and/or vent pipes.

See Horizontal Termination Page 31 and Vertical Termination Pages 32 - 33.

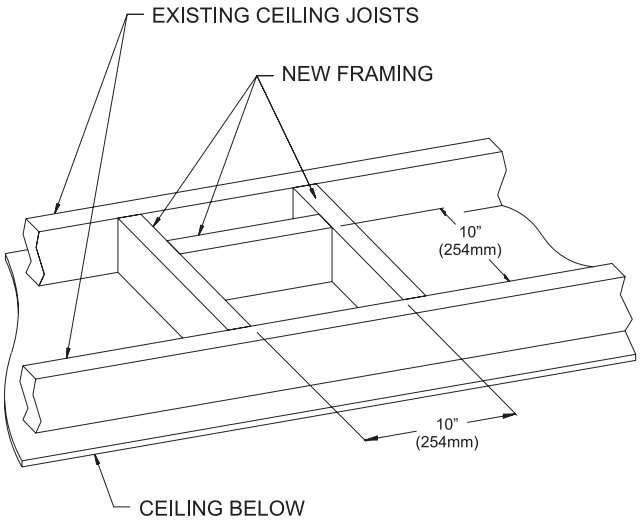


**Figure 48**

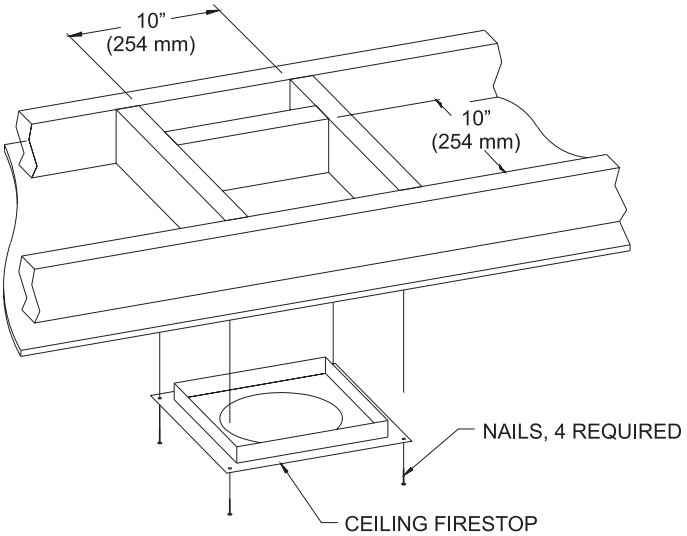


**Figure 49**

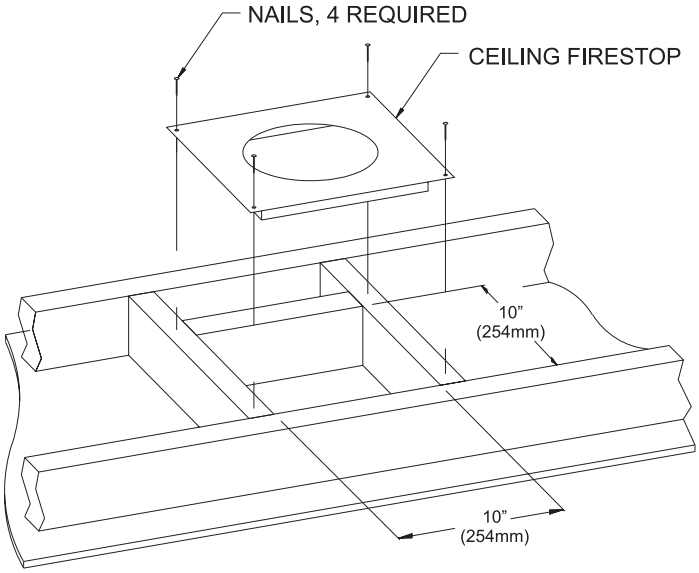


**Figure 50 (Attic Installation)**

See **Horizontal Termination** Page 31 and **Vertical Termination** Pages 32 - 33.

# TERMINATION CLEARANCES

Termination clearance for buildings with combustible and noncombustible exteriors.

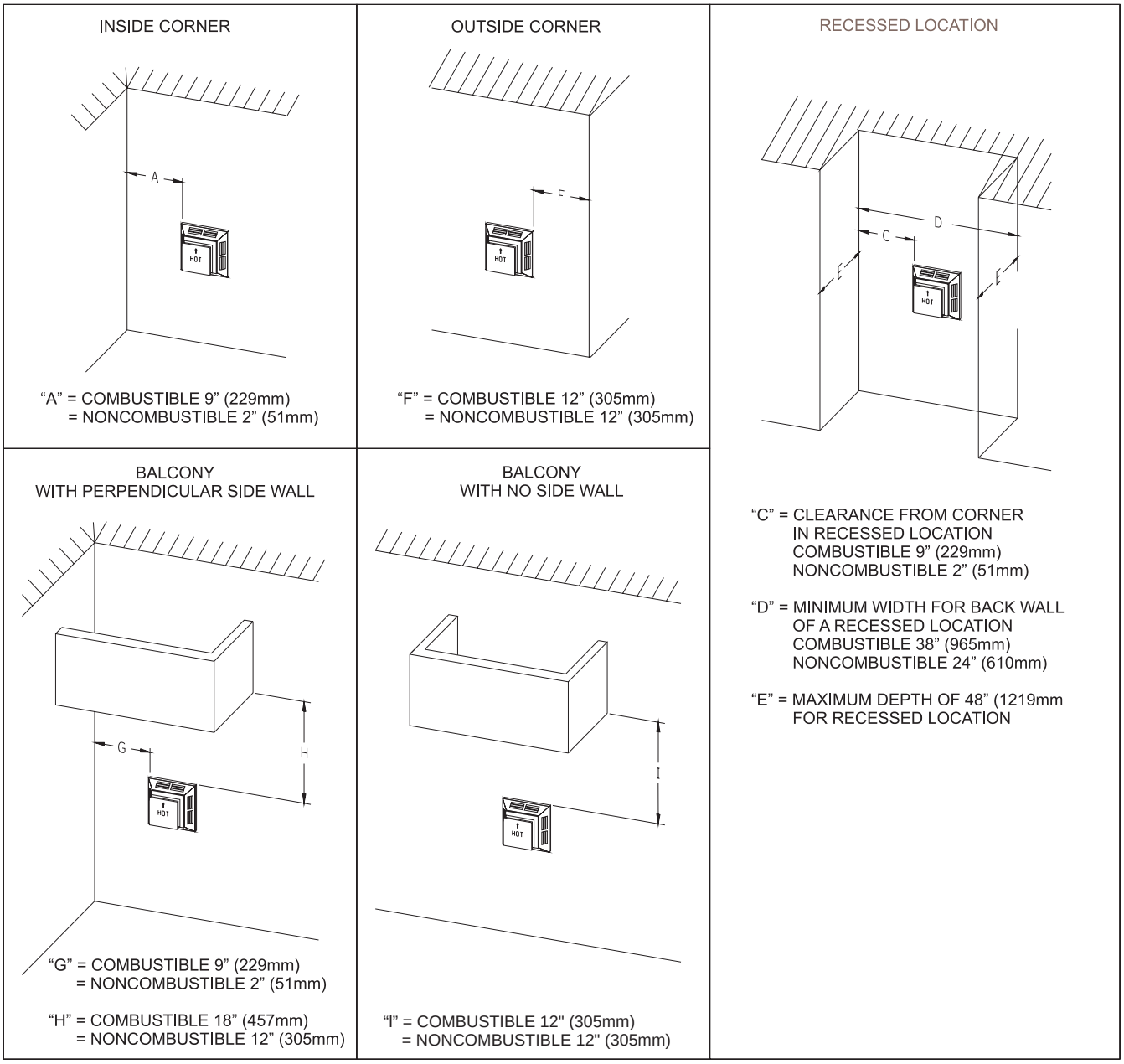


**Figure 51**

**Vertical Sidewall Installations**

**Important!** Minimum clearance between vent pipes and combustible materials is 3 inches on top, and 1 inch on bottom and sides.

**Important!** When vent termination exits through foundation less than 20 inches below siding outcrop, the vent pipe must extend outward so that the horizontal vent terminal is located flush to, or beyond the outcrop siding.

**Information on Various Venting Routes and Components**

**Important:** It is always best to locate the fireplace in such a way that minimizes the number of offsets and horizontal vent length.

Since it is very important that the venting system maintain its balance between the combustion air intake and the flue gas exhaust, certain limitations as to vent configurations apply and must be strictly adhered to.

The graph showing the relationship between vertical and horizontal side wall venting will help to determine the various vent lengths allowable.

The horizontal vent run refers to the total length of vent pipe from the flue collar of the fireplace to the face of the outer wall.

The maximum horizontal vent run is 20 feet (6.10 m) when the vertical vent rise is 8 feet (2.44 m). **See Figure 32 on page 20.**

Venting terminals shall not be recessed into wall or siding.

# HORIZONTAL TERMINATION

***NOTICE***: The termination cap must pass through the wall firestop from the exterior of the building. Adjust the termination cap to its final exterior position on the building.

**⚠ CAUTION**

**The termination cap must be positioned so that the arrow is pointing up. Failure to properly position the parts may result in a hazardous situation.**

Attach the termination cap with the four wood screws provided. Before attachment of the termination, run a bead of silicone sealant rated above 250°F on its outside edge to make a seal to the exterior wall.

**⚠ CAUTION**

**Replace the wood screws with the appropriate fasteners for use on stucco, brick, concrete or other types of siding. Failure to use the proper fasteners may result in a hazardous situation.**

**⚠ CAUTION**

**Install a vinyl siding standoff if the exterior walls are finished with vinyl siding or materials that could become discolored or warp.**
**Install the vinyl siding standoff between the vent termination and the exterior wall. See Figure 52. This horizontal vent termination bolts onto the flat portion of the vinyl siding standoff, so an air space will exist between the wall and the termination cap.**

**ATTENTION**

**VINYL SOFFIT, VINYL CEILING, VINYL OVERHANG DISCLAIMER Clearances are to heat resistant material (i.e. wood, metal). This does not include vinyl. Empire Comfort Systems will not be held responsible for heat damage caused from terminating under vinyl overhangs, vinyl ceilings or vinyl ventilated/ unventilated soffits.**

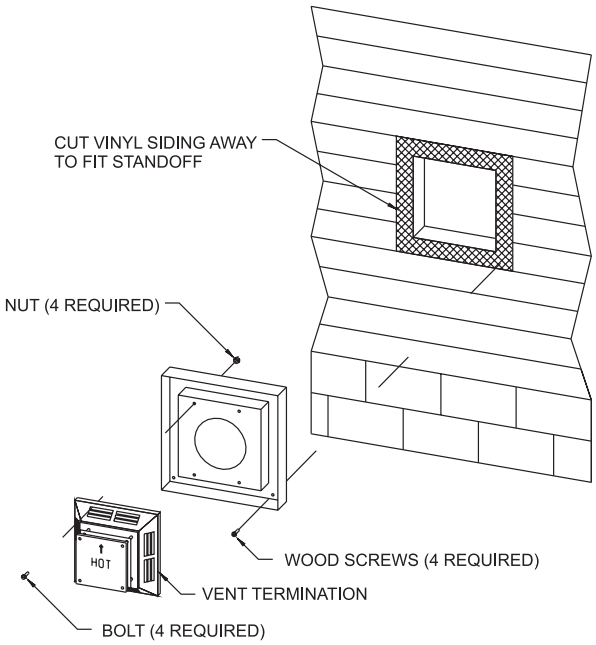


**Figure 52**

Snorkel terminations are available for installations requiring a vertical rise of the building. **See Figure 53.** Provide proper drainage to prevent water from entering the snorkel termination if it will be installed below grade (i.e. in a basement). Refer to **(Figure 54).** Do not attempt to enclose the Snorkel within the wall or any other type of enclosure.

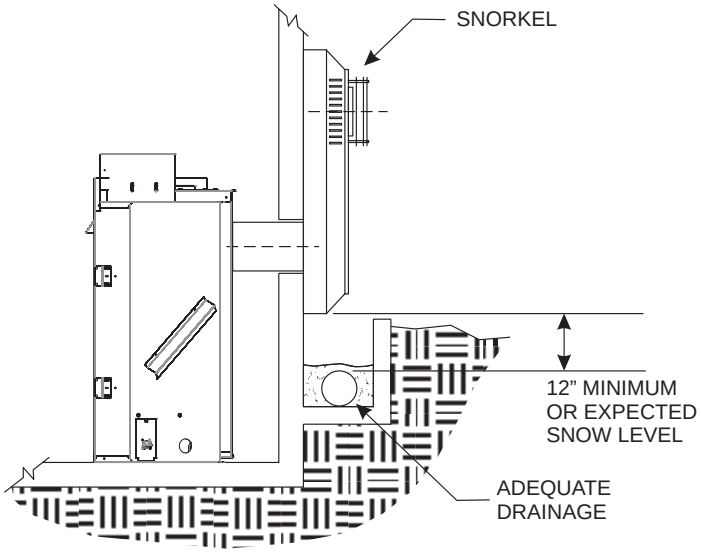


**Figure 53**
**(Snorkel or Snowlevel Clearance Required)**

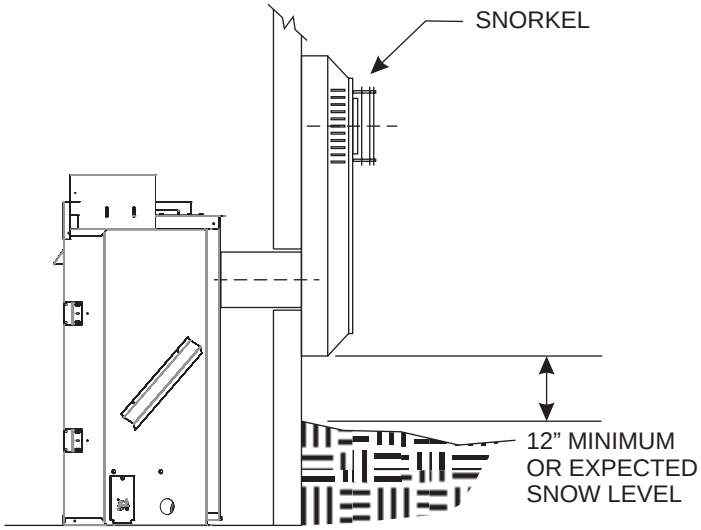


**Figure 54**
**(Snorkel or Snowlevel Clearance Required)**

# VERTICAL TERMINATION

**Determine Minimum Vent Height Above the Roof.**
Locate and mark the center point of the vent pipe using a nail on the underside of the roof. Drive the nail through the center point. Mark the outline of the roof hole around this center point.
***NOTICE***: Size of the roof hole dimensions depend on the pitch of the roof. There must be a 1 inch clearance (25 mm) to the vertical pipe sections. This clearance is to all combustible material.
Cover the opening of the vent pipe and cut and frame the roof hole. Use framing lumber the same size as the roof rafters and install the frame securely. Flashing anchored to frame must withstand high winds. The storm collar is placed over this joint to make a water-tight seal. Non-hardening sealant should be used to completely seal this flashing installation.

**⚠ WARNING**

**Major U.S. building codes specify minimum chimney and/or vent height above the roof top. These minimum heights are necessary in the interest of safety. These specifications are summarized in Figures 55A and 55B.**

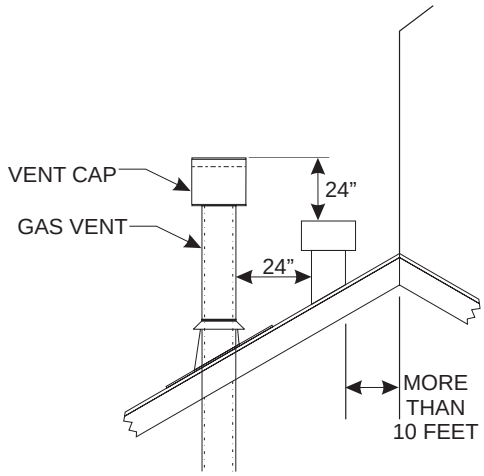


**Figure 55A**

Note that for steep roof pitches, the vent height must be increased. In high wind conditions, nearby trees, adjoining roof lines, steep pitched roofs, and other similar factors can result in poor draft, or down-drafting. In these cases, increasing the vent height may solve this problem.

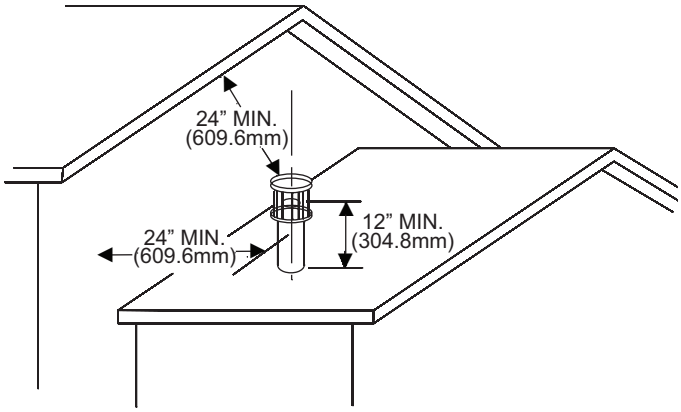


**Figure 55B**

When terminating the vent cap near an exterior wall or overhang, maintain minimum clearances as shown in **Figure 55B.**

**General Maintenance**
Conduct an inspection of the venting system semi-annually.

1. Check any areas of the venting system exposed to the elements for corrosion. Corrosion will appear as rust spots or streaks and, in extreme cases, holes .Immediately Replace any components that show signs of corrosion.
2. Remove the cap and shine a flashlight down the vent. Remove any foreign material.
3. Check for evidence of excessive condensate, such as water droplets forming in the inner liner and subsequently dripping out at joints. Condensate can cause corrosion of caps, pipe and fittings. Excessive condensate may be caused by having excessive lateral runs, too many elbows and exterior portions of the system being exposed to cold weather.
4. Inspect joints to verify that no pipe sections or fittings have been disturbed or loosened. Check mechanical supports, such as wall straps or plumbers’ tape for rigidity.

Do not recess venting terminations in a wall or siding.
Provide a removable panel or other inspection means in the enclosure for visual inspection of the flue connection.
***NOTICE***: This also pertains to vertical vent systems installed on the outside of the building.
Slide the vertical vent cap over the ends of the vent pipe and secure. **See Figure 57 on page 33.**

**Install the Vent System in a Chase**
A chase is a vertical box-like structure built to enclose the gas fireplace and/or its vent system. Vertical vent runs on the outside of a building may be, but are not required to be installed inside a chase.

**⚠ CAUTION**

**Treatment of firestop spacers and construction of the chase may vary with the type of building. These instructions are not substitutes for the requirements of local building codes. Therefore, your local building codes must be checked to determine the requirements for these steps.**

***NOTICE*:** It is always good building practice to insulate the chase as you would the outside walls of the home. This is especially important for cold climate installations. Install the vent system by following the instructions in this manual after completion of the chase framing. Build the chase large enough so the minimum clearance of combustible materials (including insulation) to the vent system are maintained.

**Installation of Vertical Inlet Baffle**
Use the vertical inlet baffle only in a completely vertical vent installation. The vertical inlet baffle can be used when the vertical vent rise is between 10 feet and 40 feet. **For Simpson Duravent installations only**: To maintain the yellow flame in the main burner, purchase Vertical Inlet baffle from your Empire Comfort Systems dealer.

In a vertical vent rise, the rear (yellow) flame on the main burner can be reduced due to the drawing action from the flue exhaust pipe and the air inlet pipe. A decrease in the height or the appearance of the yellow flame may occur when the vertical vent rise is between 10 feet and 40 feet. To enhance the yellow flame on the main burner, the vertical inlet baffle can be attached to the direct vent high wind vertical cap.

**Install the vertical inlet baffle**

1. Place the vertical inlet baffle over the exterior of the air inlet openings on the direct vent high wind vertical cap.
2. There are three sections of air openings on the exterior of the air inlet pipe.
   To achieve the maximum amount of yellow flame the vertical inlet baffle will cover-up three sections of air openings.
   To achieve the minimum amount of yellow flame the vertical inlet baffle will cover-up one section of air openings.
3. Attach vertical inlet baffle to the direct vent high wind vertical cap with two 3/8-inch hex-head screws provided with vertical inlet baffle.
4. Installation of vertical inlet baffle is completed.

**Parts List**

| Description | Part Number | Quantity Supplied |
|---|---|---|
| Vertical Inlet Baffle | DVF-139 | 1 |
| 3/8-inch Hex-Head Screw | R-2656 | 2 |

**Reassemble and Reseal Vent Pipe System**

Attach the vent pipe to the inlet and outlet vent adaptor on the fireplace in either the vertical or horizontal position. Replace horizontal and vertical pipe lengths, elbows and horizontal or vertical termination kit.

Each vent section has four equally spaced interior ridges on one end and four equally spaced recesses on the other. Align the interior ridges on one section with the recesses on the fireplace collar or previously installed vent section and slide the unattached vent section over the other vent section. Rotate the newly attached vent section clockwise approximately 45 degrees to lock the vent section into place. Continue replacing components per the vent system configuration. Be certain that each succeeding vent component is securely fitted and locked into the preceding component in the vent system.

**Reassemble and Reseal Gas Accumulation Relief System Glass Frame Assembly and Combustion Chamber**

The glass frame assembly gaskets and combustion chamber must be examined by a qualified service person for damage when the glass frame assembly is pivoted open by a delayed ignition in the main burner. All damaged gaskets on the glass frame assembly and combustion chamber must be replaced by a qualified service person. If damage occurs to the combustion chamber, it must be replaced by a qualified service person. Contact your Empire Dealer for replacement parts.

**Vertical Through the Roof Applications**

Your Gas Fireplace has been approved for:

a) Vertical installations up to 40 feet in height.
b) Two sets of 45 degree elbow offsets within these vertical installations. From 0 to a maximum of 8 ft. a vent pipe can be used between elbows.
c) Wall straps must be used to support offset pipe every 4 feet.

This application will require that you first determine the roof pitch and use the appropriate venting components.

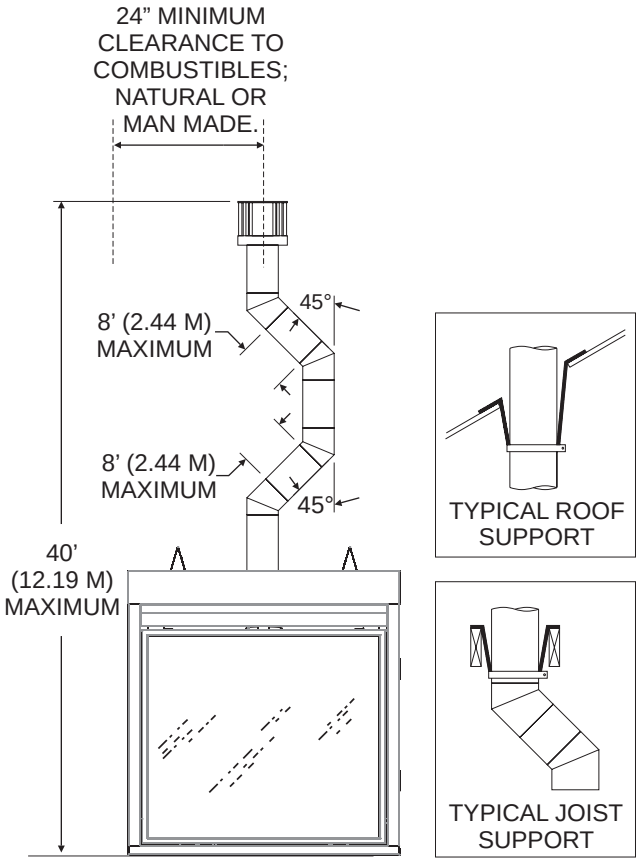


**Figure 56**

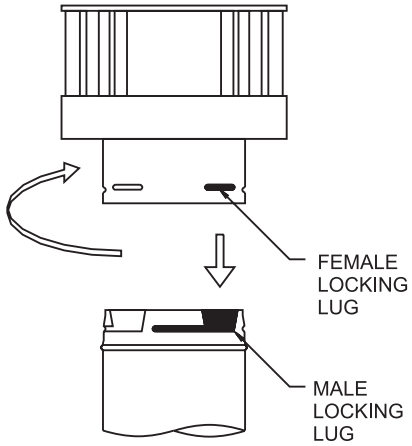


**Figure 57**

# DVVK-4F FLEX VENT INSTRUCTIONS

**⚠ CAUTION**

**Sharp edges. To avoid injuries, wear safety gloves when handling the flex vent components.**

The **DVVK-4F FLEX VENT KIT** includes the following components:

- (1) Horizontal Termination Cap
- (1) 4-foot section of Flex vent with spacers (4" flue/7" outer pipe)
- (1) 4-inch diameter Flue adapter collar
- (1) 7-inch diameter Outer Vent adapter collar
- (1) Wall Firestop/Thimble Assembly
- Hardware pack that includes band clamps and screws

Flex venting can be installed either vertically or horizontally off of the DVCD Series fireplaces. When installing a horizontal vent run from top connections, maintain at least ½ inch rise for every 12 inches of vent run. When venting horizontal off the rear vent connections, allow a minimum rise of 2 inches. Refer to Figure 52 when mounting termination near vinyl siding.
Attention: Always stretch and secure venting with wire or metal strapping to ensure that the horizontal runs do not sag.
If space permits, it is generally easier to attach venting in the top vent configuration.

Vent connections should overlap a minimum of 1 inch for proper sealing.
Always follow the general venting requirements for vent terminal location, vent lengths, and clearance to combustible materials.

**INSTALLATION**

1. Unpack vent components and check that all items are included.
2. Verify the spacer springs are located around the flue vent at 8-inch intervals along its length. See Figures 58 and 59. If the spacer springs are not installed, stretch the spacer springs to about 15 inches long and wrap them around the flue, then interlock the ends of each spring at 2 inches. Maintain equal distance between spring spacers.

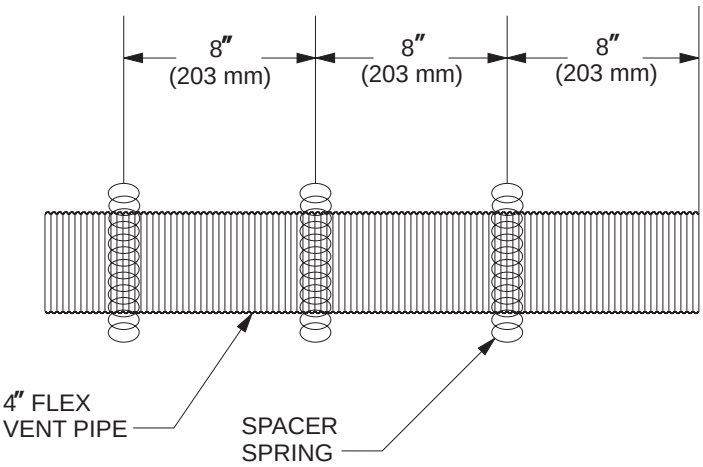


**Figure 58**

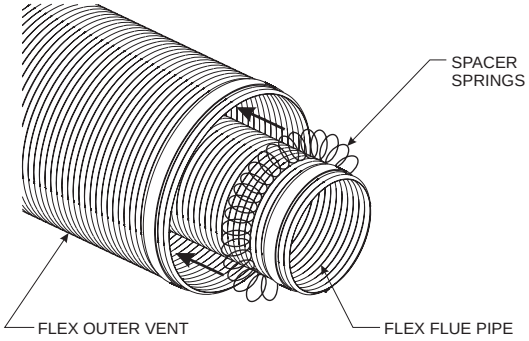


**Figure 59**

3. Remove the 6-⅝ inch diameter Vent collar from the fireplace. Replace this collar with the 7 inch diameter Flex Vent adapter collar provided with the vent kit.
4. Slide the Flex Vent flue pipe into the Outer Flex Vent pipe.
5. Install the Wall Firestop/Thimble assembly as required through the wall. Refer to the venting charts in the fireplace manual to determine the proper height and size of the vent opening. The minimum opening should be 9 inches wide by 11 inches high. The minimum combustible clearance from the horizontal vent is 1 inch from sides and bottom, and 3 inches above the vent pipe. See Figure 60.

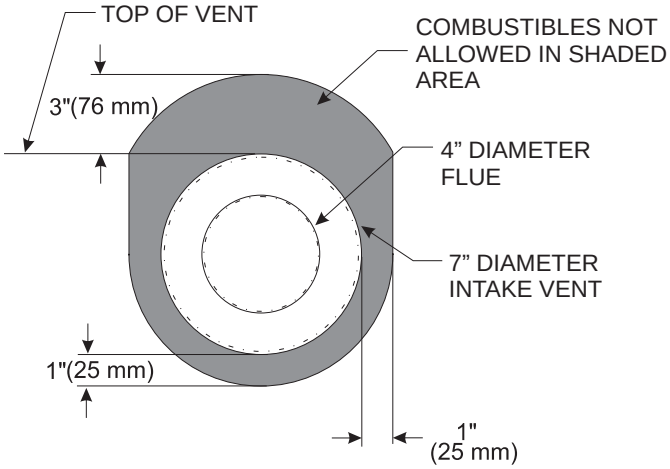


**Figure 60**

6. In most cases, after determining the length of the vent that is needed, it may be easier to install the flue and outer vent pipes to the Termination Cap first, then from the outside, feed the venting through the wall to the fireplace.
7. If the venting is to long, trim off any excess vent before attaching the vent end connectors.

**⚠ CAUTION**

**Do not use force when installing the Horizontal Vent Termination into the flex venting. Always stretch venting out first, then cut off excessive vent material prior to sliding the vent termination into the flue and inlet venting. Forcing the termination cap into the flex venting will deform the flue venting, which will restrict the exhaust gases, and cause improper operation of the fireplace.**

8. Attach the Termination Cap to the outside of the house.
9. Prior to making the vent connections, apply high temperature sealant (600 degree F min.) to the vent connections before securing with the band clamps provided. **NOTE:** the flue pipe end **without the adapter** is to be installed to the Termination Cap.
10. Apply sealant to the outside of the flue pipe adapter and connect to the flex flue pipe. Then insert the adapter into the fireplace flue. Secure flue adapter to the fireplace flue with a minimum of two screws provided. **See Figure 61.**

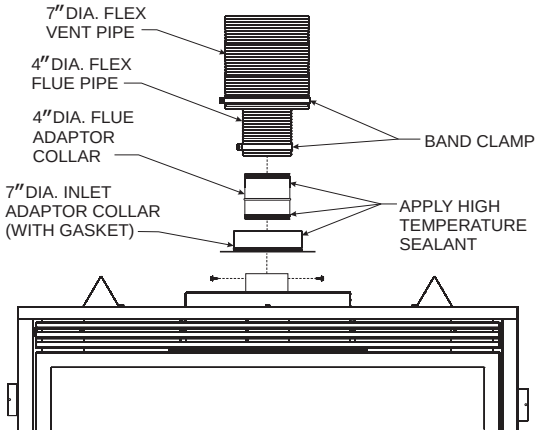


**Figure 61**

11. Attach the Outer Vent pipe to the 7-inch diameter Collar on the fireplace with a large band clamp provided. Sealant may also be used on the outer vent connections.
12. Check all vent connections for tightness. Make sure horizontal venting has the proper rise and combustible clearances required. Refer to venting charts in fireplace instruction manual.

# DVVK-4RE VENT KIT INSTALLATION INSTRUCTIONS

**⚠ CAUTION**

**Sharp edges. To avoid injuries, wear safety gloves when handling the vent components.**

**Tools Needed for Installation:**
- Sheet metal snips
- 5/16” nut driver
- Phillips head screwdriver - #2
- High temperature sealant or furnace cement rated for continuous use at 600ºF minimum
- Measuring tape

**Parts Verification**
See parts list on page 38 to verify components included in this vent kit prior to installation.

**NOTE:** Use Vinyl Siding Vent Kit DV-822 if installing the vent kit onto wood, lap, or vinyl siding. DV-822 is available from Empire Comfort Systems, Inc. The depth is 3 inches, which enables the vent cap to be extended away from vinyl siding or projections. The wall depth plus the additional 3 inches depth of the vinyl siding vent cap extension should not exceed a total depth of 13-3/4 inches.
If wall depth exceeds 13-3/4 inches, extend system using 6-5/8 x 4-inch rigid venting (See Fireplace Instructions for approved lengths). **See Figure 63.**

**Installing Wall Thimble/Firestop Assembly**
1. Fix fireplace to permanent location. If using rigid venting system, install up to the location where it will exit the building.
2. Cut hole in wall for wall thimble/firestop assembly (**Figure 62**) into your combustible wall. Note: On brick or block exterior wall a 7-inch diameter hole needs to be cut.
   Measure the total wall thickness to determine whether or not the extension thimble is to be used. If the combustible wall depth is over 5-3/8 inches, then the extension thimble should be used (**Figure 62**).
3. Install the wall thimble assembly through the framed opening so the firestop plate is on the interior wall (**Figure 62**). Telescope section should extend all the way through the exterior wall. Attach with four 10 x 1 inch screws.
4. When placing the vent cap on an exterior wall covered with combustibles such as wood, lap, or vinyl siding, install the vinyl siding kit to the exterior wall sheathing.

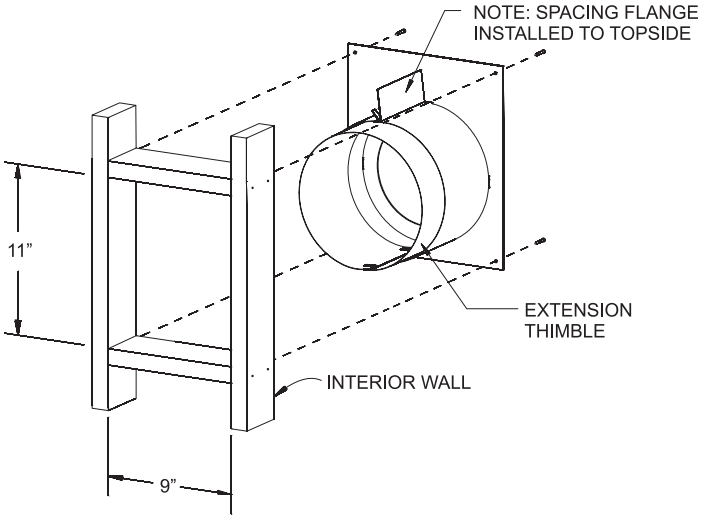


**Figure 62**

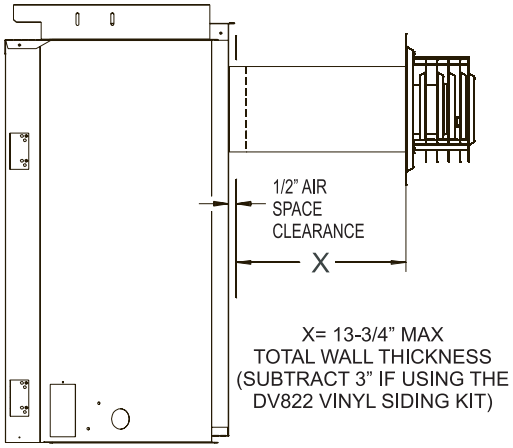


**Figure 63**

**Cutting Vent Tubes**
**This is the most important part of the installation.** With the fireplace (and the rigid venting system if used) fixed to its permanent location, the 6-5/8 inch diameter air inlet tube and the 4-inch diameter flue outlet tube are to be marked and cut using the following procedure.
5. Attach the inlet tube to the outside mounting plate. Align tinnerman clips on the tabs of the air inlet tube to the holes on outside mounting plate, and fix with two #10 x 1/2 inch screws.
6. With the vinyl siding kit installed to wall (if necessary), insert the 6-5/8 inch diameter tube with outside mounting plate attached through hole in wall. Connect to collar on fireplace or rigid vent system. Measure between wall or vent cap extension and outside mounting plate (**Figures 64 and 65**).

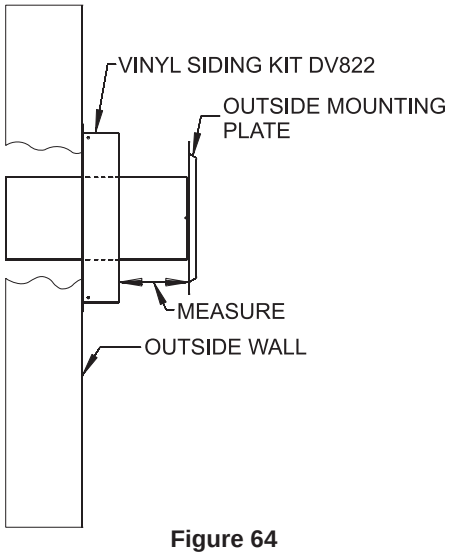


**Figure 64**

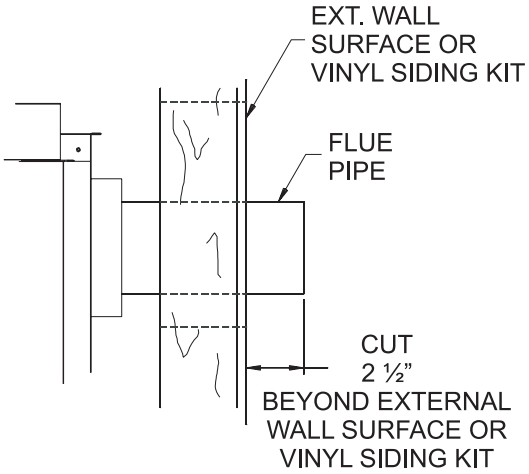


**Figure 65**

7. Remove outside mounting plate with tube attached from wall. Mark and cut the extra length of the 6-5/8 inch diameter tube from the opposite end. Do not crimp or enlarge tube.
8. Attach the 4-inch diameter flue outlet tube onto the rigid venting system or directly to fireplace. Ensure the 4-inch diameter flue outlet tube is placed as far as possible onto the rigid venting system. Mark the 4-inch diameter flue outlet tube 2-1/2 inches beyond the vinyl siding kit or wall. **See Figure 65**. Remove the 4-inch diameter flue outlet tube from rigid venting system. When installing directly to fireplace, tape gasket needs to be used.
9. Mark or wrap tape completely around the tubes at the marked points to help in making a true cut. Do not crimp or enlarge tubes.
10. From outside: Push the 6-5/8 inch diameter inlet tube/ mounting plate onto end of rigid venting system to correct position. Fasten the outside mounting plate to the vinyl siding kit or wall with four 10 x 1 1/2" screws. (Ensure upward slope).
11. From inside: Attach the inlet tube to the collar on the back of the fireplace (or the rigid venting system) using three self tapping screws.
12. Seal the 4-inch diameter flue outlet tube. Follow instructions and diagram (**Figure 66**).
13. Fasten 4-inch diameter flue outlet tube in place. Do not "twist" the flue outlet tube into the fireplace collar (or rigid venting system). Hold the tube by the seam and push in using a perpendicular "rocking" motion. This ensures the seam on the tube stay intact.
14. Fasten vent cap end using three 10 x 1/2-inch screws to mounting plate.

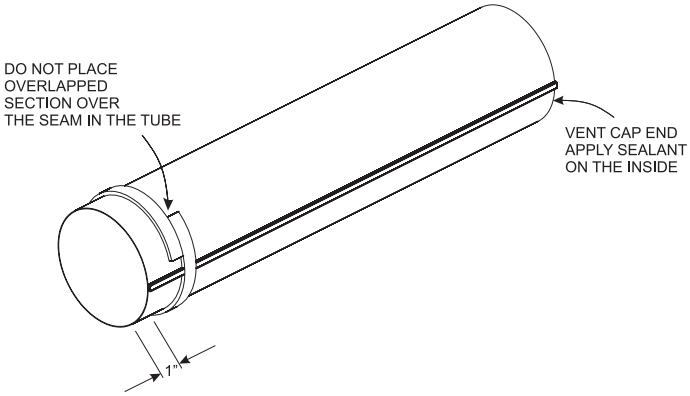


**Figure 66**

***NOTICE:*** Tape gasket to be applied prior to installing to fireplace flue outlet tube only. Tape gasket should not be used when mating the flue outlet tube to a rigid venting system.

**Sealing 4-inch Diameter Flue Outlet Tube**
Follow correct option according to venting method.

**Connecting Directly to Fireplace**
If the air inlet and flue outlet tubes are to be connected directly to the unit (no rigid venting system is being used), then the gasket provided must be used to seal the 4-inch flue outlet tube. Peel the paper off the self-adhesive gasket and then wrap it around the end of the tube (if tube was cut, it is recommended to use cut end) as shown in **Figure 66**. Pull the gasket tight at all times while wrapping it around tube. The gasket ends should align, to form a complete seal. The overlapped section should NOT come in contact with the seam in the tube. Apply high temperature sealant to the opposite end of the tube (on the inside of the tube). The end with the gasket will attach to the back of the unit. Continue with Step 13.

**Connecting to Rigid Vent System**
If the air inlet and flue outlet tubes are to be connected to a rigid venting system (and not directly to the back of the unit), then **do not** use the gasket provided. High temperature sealant should be applied to the outside of the 4-inch diameter flue outlet tube (if tube was cut, it is recommended to use cut end) and to the inside of the tube on the end that connects to the vent cap. Continue with step 13.

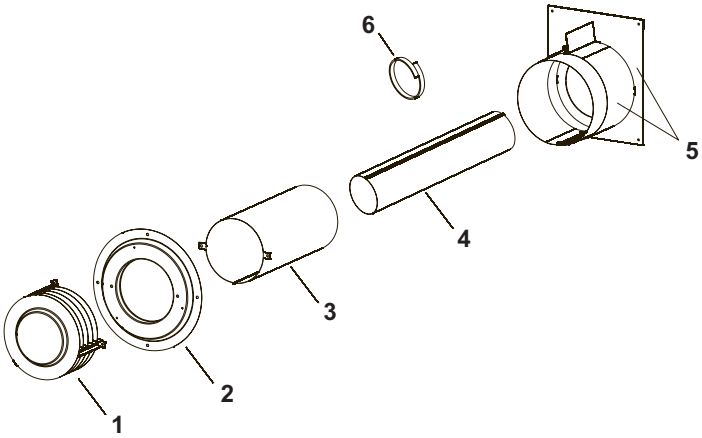


**PARTS LIST**

| INDEX NUMBER | PART NUMBER | DESCRIPTION |
|---|---|---|
| 1 | DV769 | Vent Cap Assembly |
| 2 | 19193 | Outside Mounting Plate |
| 3 | 19194 | Air Inlet Tube |
| 4 | DV524 | Flue Outlet Tube |
| 5 | 19196 | Firestop/Thimble Assembly |
| 6 | 20527 | Gasket |

# LOG IDENTIFICATION FOR DVCD32 FIREPLACES

| Log Description | Part Number | Front View | Top View |
|---|---|---|---|
| Log A | 28371 | | |
| Log B | 28372 | | |
| Log C | 28368 | | |
| Log D | 28367 | | |
| Log E | 28369 | | |
| Log F | 28370 | | |
| Log G | 28524 | | |

# LOG PLACEMENT FOR DVCD32 FIREPLACES

This fireplace is supplied with a set of seven ceramic fiber logs. Do not handle these logs with your bare hands! Always wear gloves to prevent skin irritation from ceramic fibers. After handling the logs, wash your hands gently with soap and water to remove any trace of fibers.

**Accessing the Interior of the Fireplace**

1. Remove the barrier screen and glass door. See Barrier Screen and Glass Door Removal, page 80.

The positioning of the logs is critical to the safe and clean operation of this fireplace. Sooting and other problems may result if the logs are not properly and firmly positioned in the fireplace. Please refer to **Figure 67** and the following WARNING when completing log placement instructions. For step by step log placement instructions, see pages 41 - 48.

**⚠ WARNING**

**Failure to position the parts in accordance with this diagram or failure to use only parts specifically approved with this fireplace may result in property damage or personal injury.**

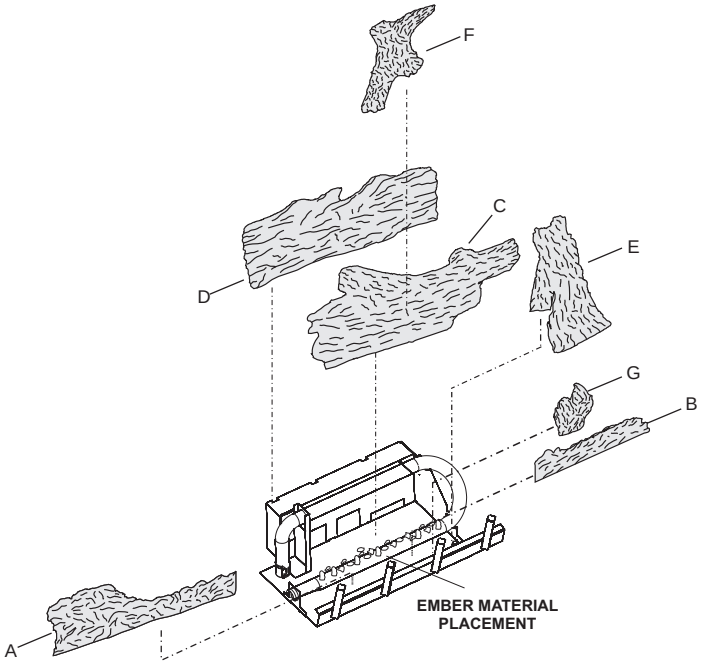


**Figure 67**

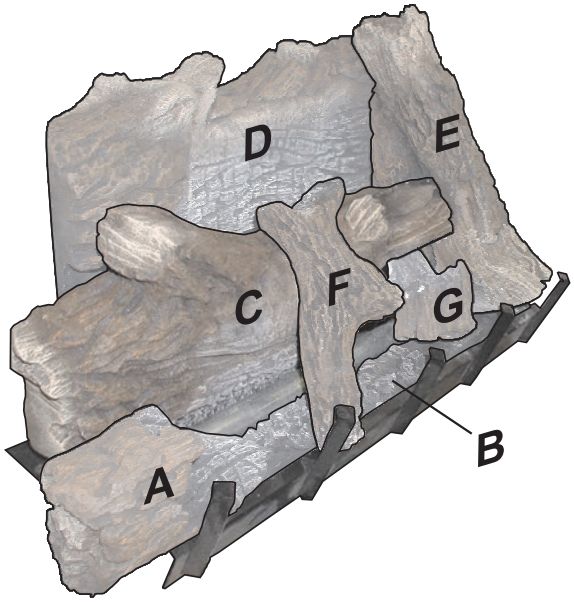


**Figure 68**

**Decorative Material Placement**

1. Position all of the logs before placing the decorative materials.
2. Place the decorative rocks in front of the grates and at the sides of the main burner pan.
3. Carefully separate the ember material into small amounts (no larger than “dime-size” pieces).
4. Place the ember material pieces on the front burner port area. **See Figure 69.**
   a. Fluffed up pieces of ember material one layer thick will produce the best ember glow. Do not place more than one layer of ember material onto the burner ports. Excess ember material will decrease the ember glow effect.
   b. Save any remaining ember material for future applications (as needed).

**Attention:** Do not place decorative rocks on logs or burner. The decorative rocks should only be placed on the fireplace floor.

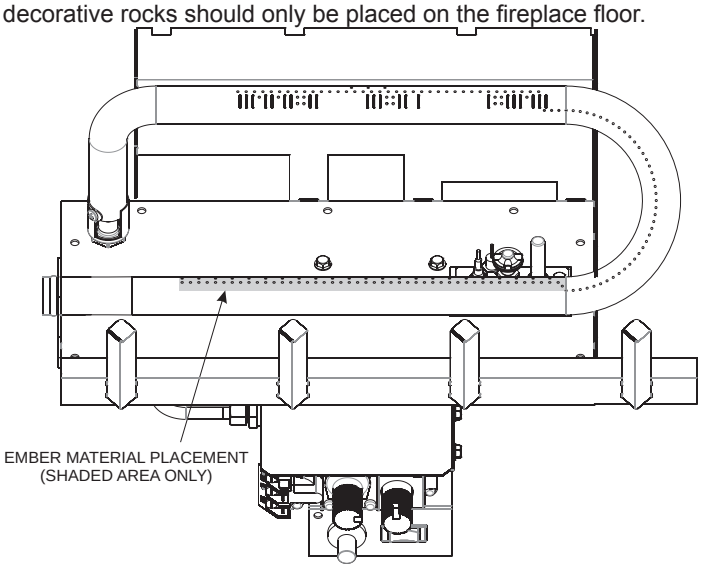


**Figure 69**

# LOG PLACEMENT FOR DVCD32 FIREPLACES

1. Align slot on back of Log A with burner bracket on left front of burner and push Log A toward the front.

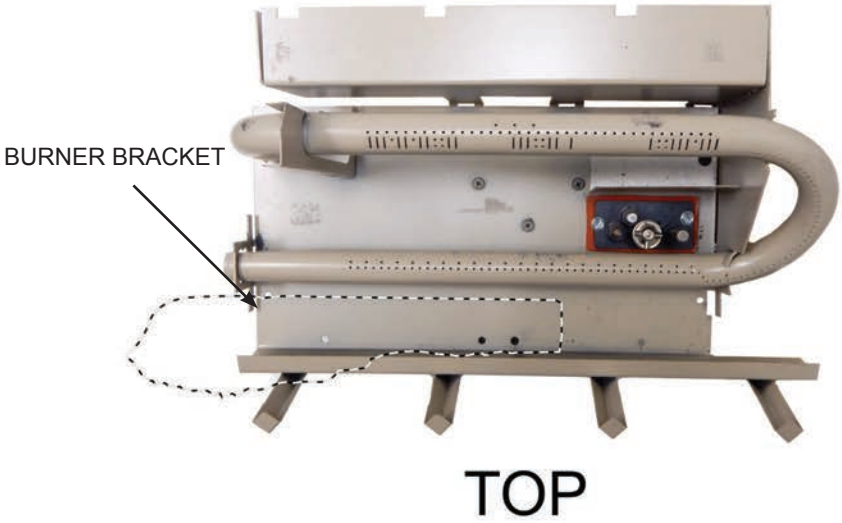


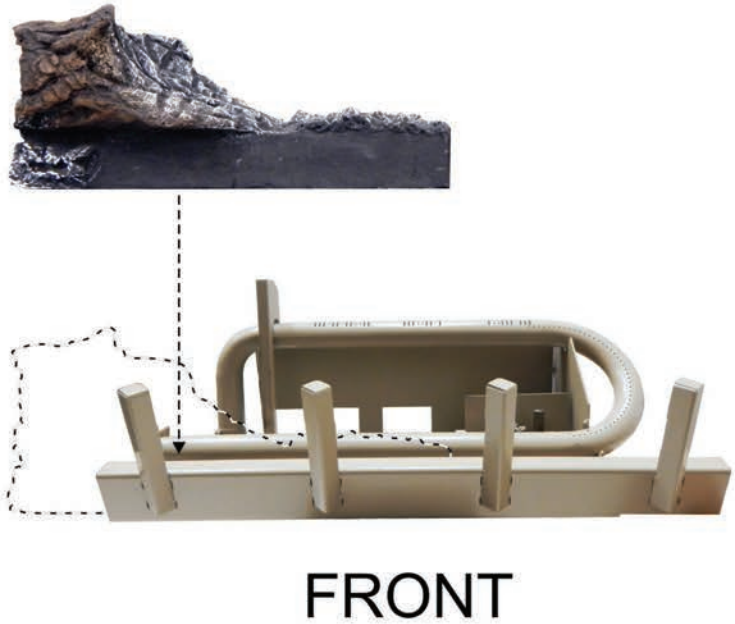

# LOG PLACEMENT FOR DVCD32 FIREPLACES

2. Align slot on Log B with the burner bracket on the front right side of the burner. Push Log B towards the front.

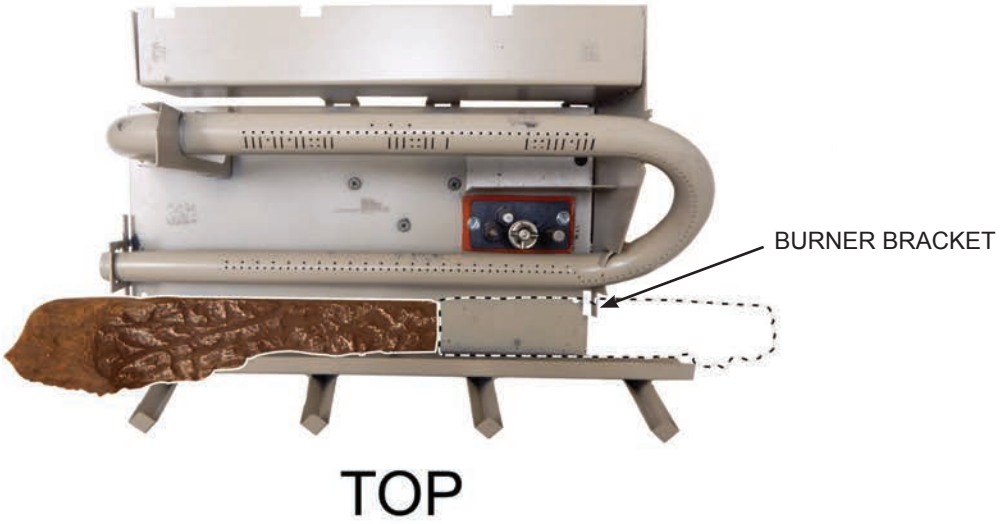


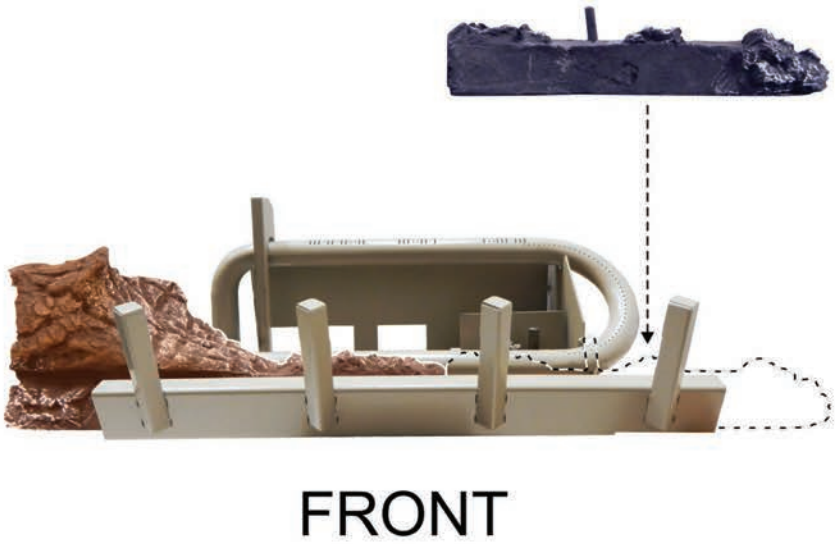

# LOG PLACEMENT FOR DVCD32 FIREPLACES

3. Align Log C slots with burner bracket on the lower left side of burner and slide log to the left until it stops

TOP

FRONT

# LOG PLACEMENT FOR DVCD32 FIREPLACES

4. Align Log D with the left rear burner bracket, resting on the rear log support. Pull forward slightly to lock the log in place over the top rear burner bracket.

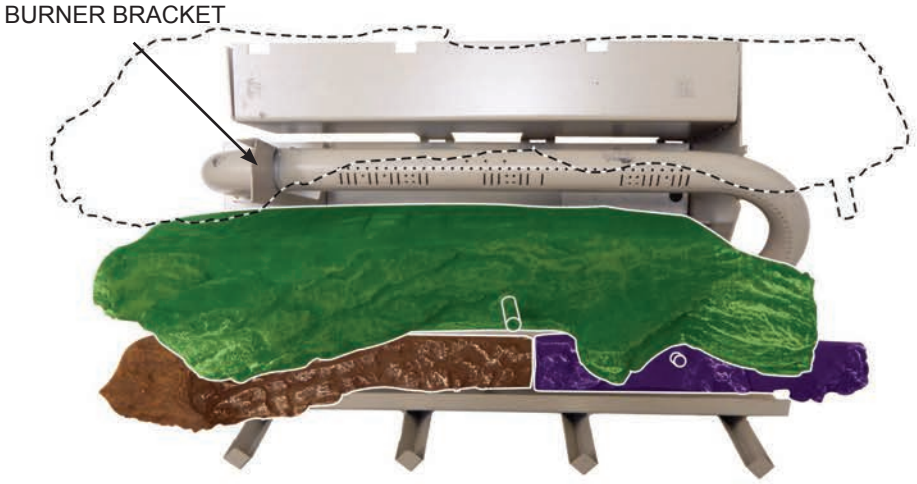


TOP

FRONT

# LOG PLACEMENT FOR DVCD32 FIREPLACES

5. Align Log E on flat section of Log B and the end of Log C and slike onto pin in Log D.

TOP

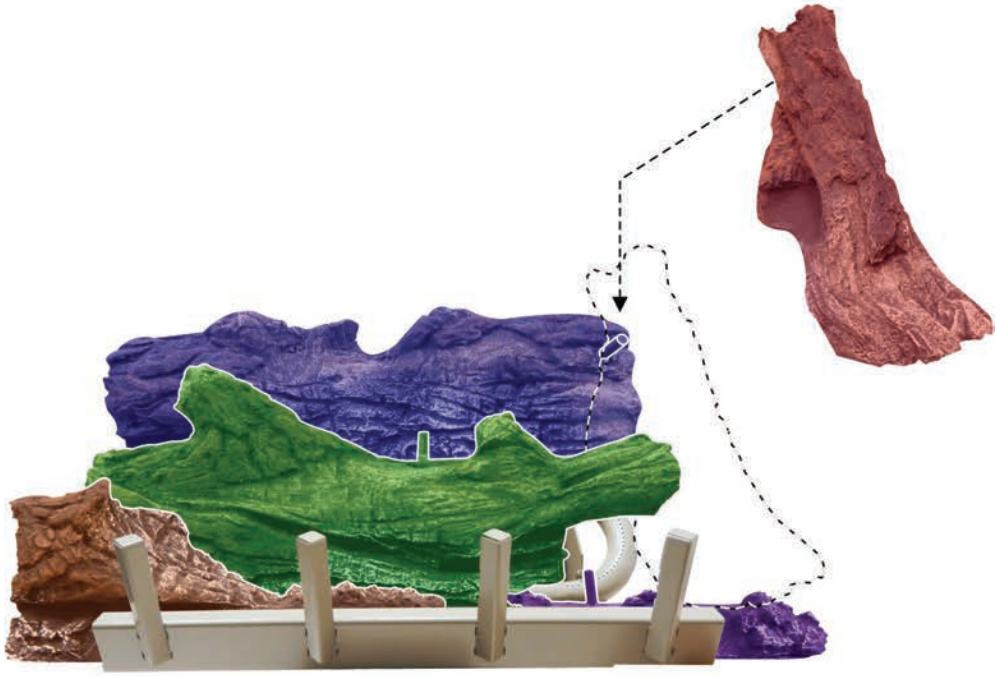

FRONT

# LOG PLACEMENT FOR DVCD32 FIREPLACES

6. Place Log F onto the pin on Log C and angle down toward the front of the burner over where Logs A and B meet.

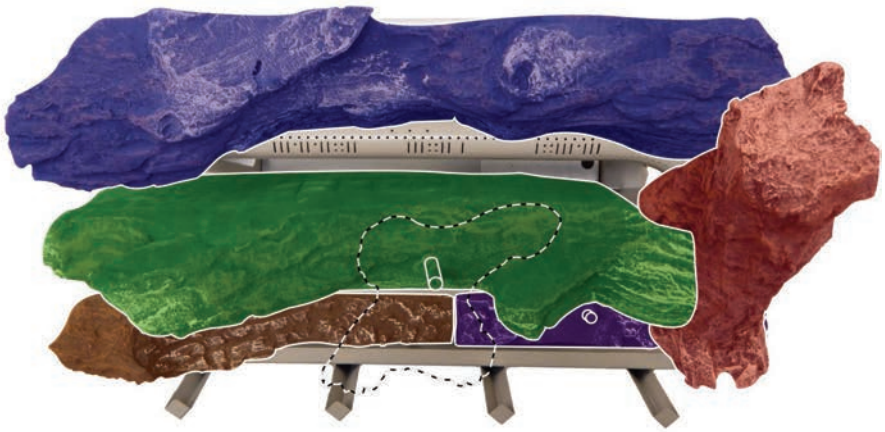

TOP

FRONT

7. Tuck Log G under Log C and onto pin of Log B.

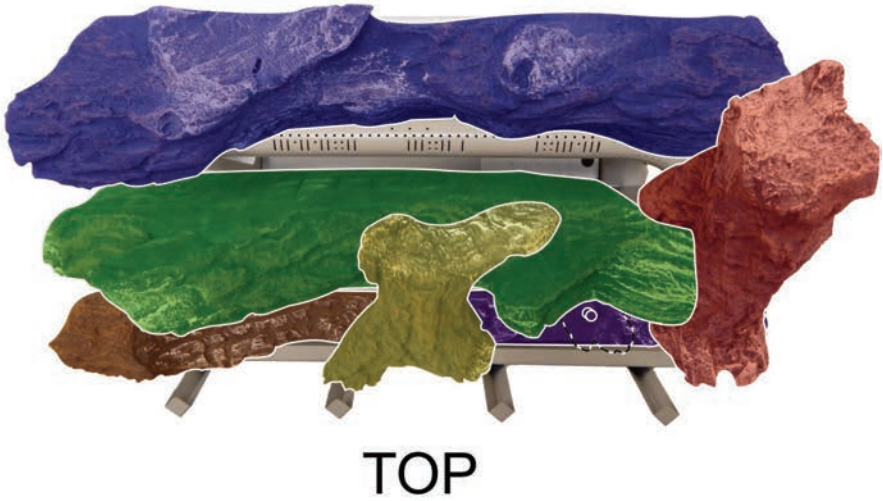


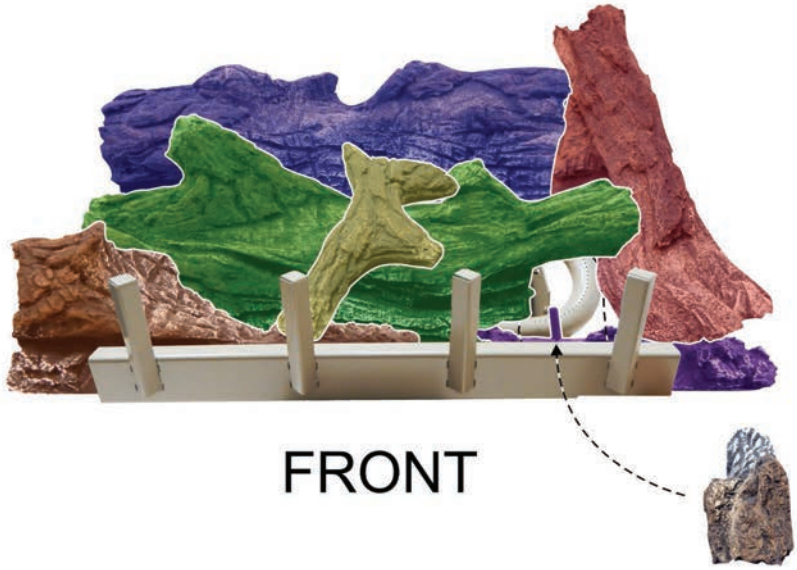

# LOG PLACEMENT FOR DVCD32 FIREPLACES

Log placement is complete.

TOP

FRONT

# LOG IDENTIFICATION FOR DVCD36 FIREPLACES

| Log Description | Part Number | Front View | Top View |
|---|---|---|---|
| Log A | 28378 | | |
| Log B | 28379 | | |
| Log C | 28375 | | |
| Log D | 28374 | | |
| Log E | 28376 | | |
| Log F | 28377 | | |

# LOG PLACEMENT FOR DVCD36 FIREPLACES

This fireplace is supplied with a set of six ceramic fiber logs. Do not handle these logs with your bare hands! Always wear gloves to prevent skin irritation from ceramic fibers. After handling the logs, wash your hands gently with soap and water to remove any trace of fibers.

**Accessing the Interior of the Fireplace**

1. Remove the barrier screen and glass door. See Barrier Screen and Glass Door Removal, page 80.

The positioning of the logs is critical to the safe and clean operation of this fireplace. Sooting and other problems may result if the logs are not properly and firmly positioned in the fireplace. Please refer to **Figure 70** and the following WARNING when completing log placement instructions. For step by step log placement instructions, see pages 51 - 57.

**⚠ WARNING**

**Failure to position the parts in accordance with this diagram or failure to use only parts specifically approved with this fireplace may result in property damage or personal injury.**

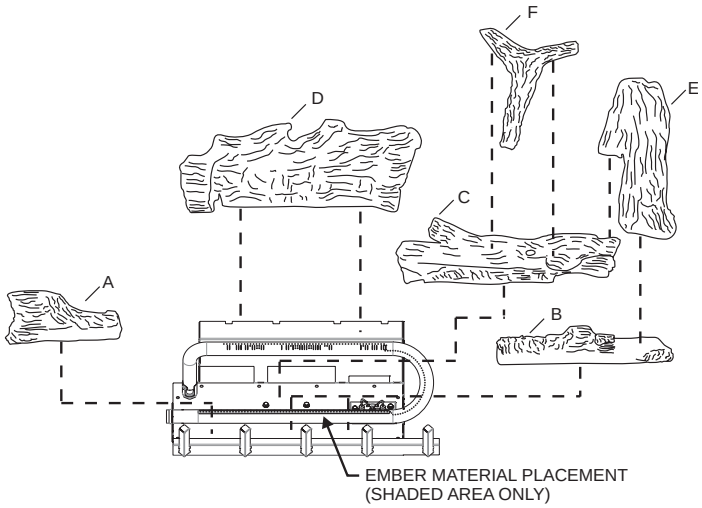


**Figure 70**

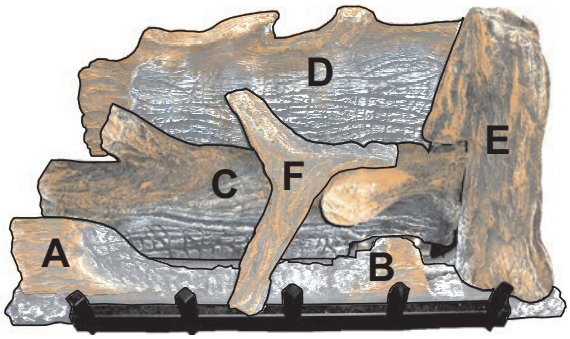


**Figure 71**

**Decorative Material Placement**

1. Position all of the logs before placing the decorative materials.
2. Place the decorative rocks in front of the grates and at the sides of the main burner pan.
3. Carefully separate the ember material into small amounts (no larger than “dime-size” pieces).
4. Place the ember material pieces on the front burner port area. **See Figure 72.**
   a. Fluffed up pieces of ember material one layer thick will produce the best ember glow. Do not place more than one layer of ember material onto the burner ports. Excess ember material will decrease the ember glow effect.
   b. Save any remaining ember material for future applications (as needed).

**Attention:** Do not place decorative rocks on logs or burner. The decorative rocks should only be placed on the fireplace floor.

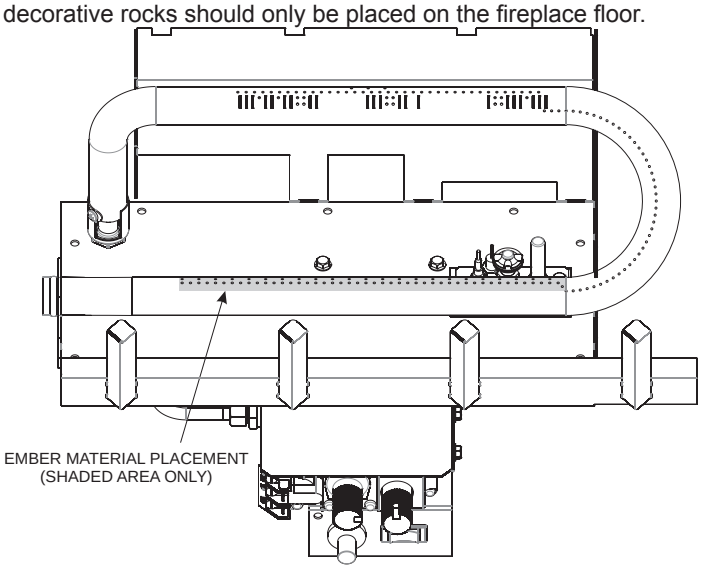


**Figure 72**

# LOG PLACEMENT FOR DVCD36 FIREPLACES

1. Align slot on back of Log A with burner bracket on left front of burner and push Log A toward the front.

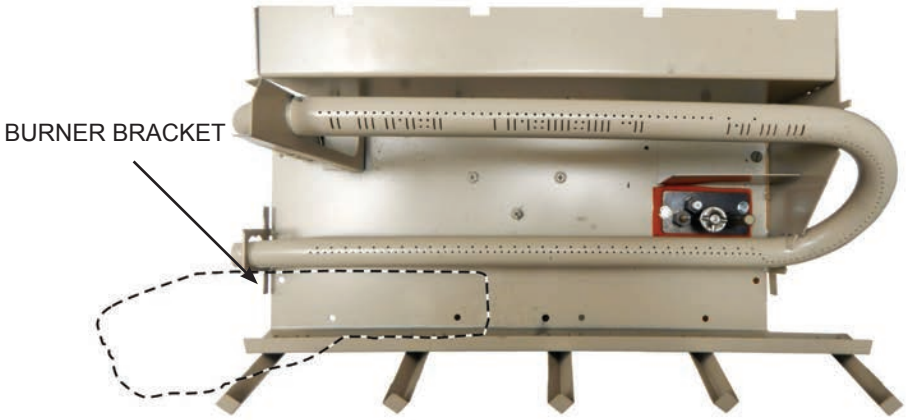


TOP

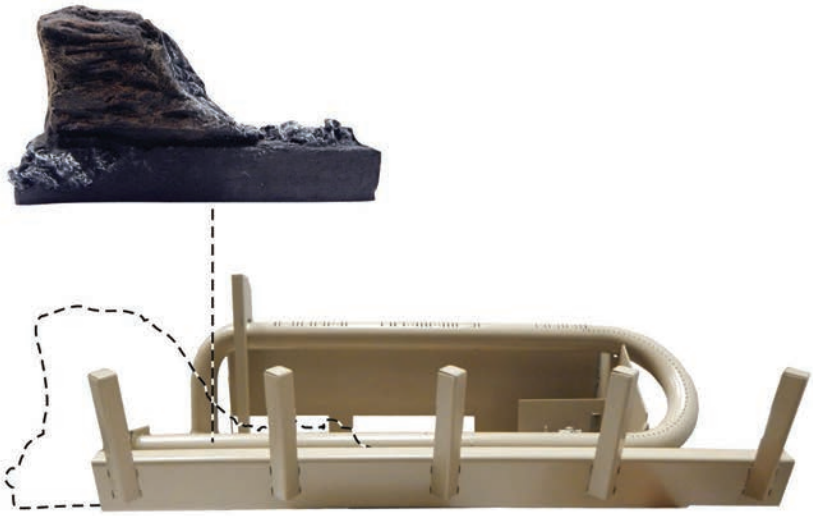

FRONT

# LOG PLACEMENT FOR DVCD36 FIREPLACES

2. Align slot on Log B with the burner bracket on the front right side of the burner. Push Log B towards the front.

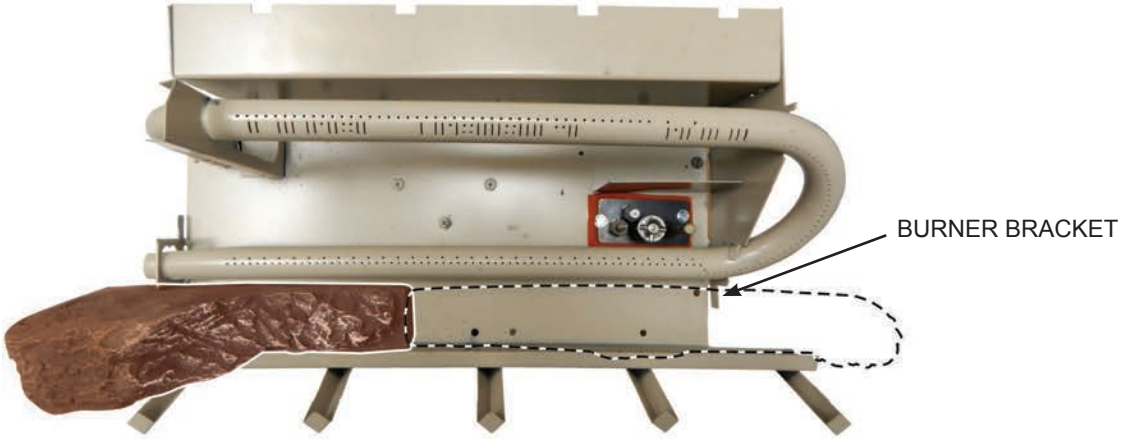


TOP

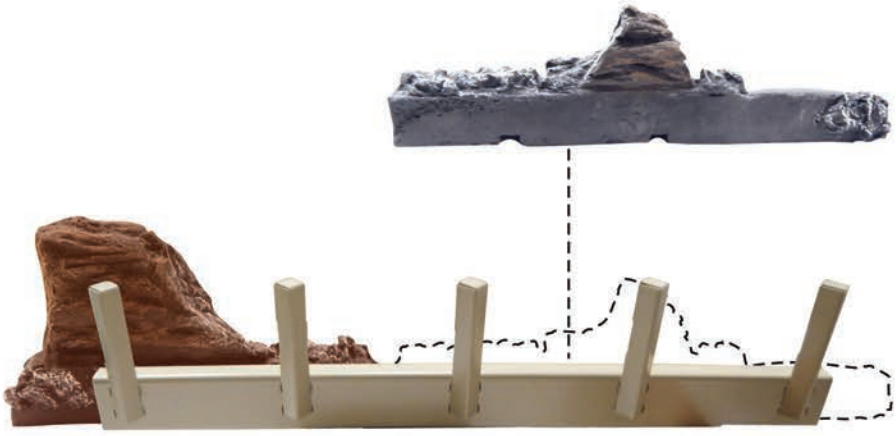

FRONT

# LOG PLACEMENT FOR DVCD36 FIREPLACES

3. Align Log C slots with burner bracket on the lower left side of burner and slide log to the left until it stops

TOP

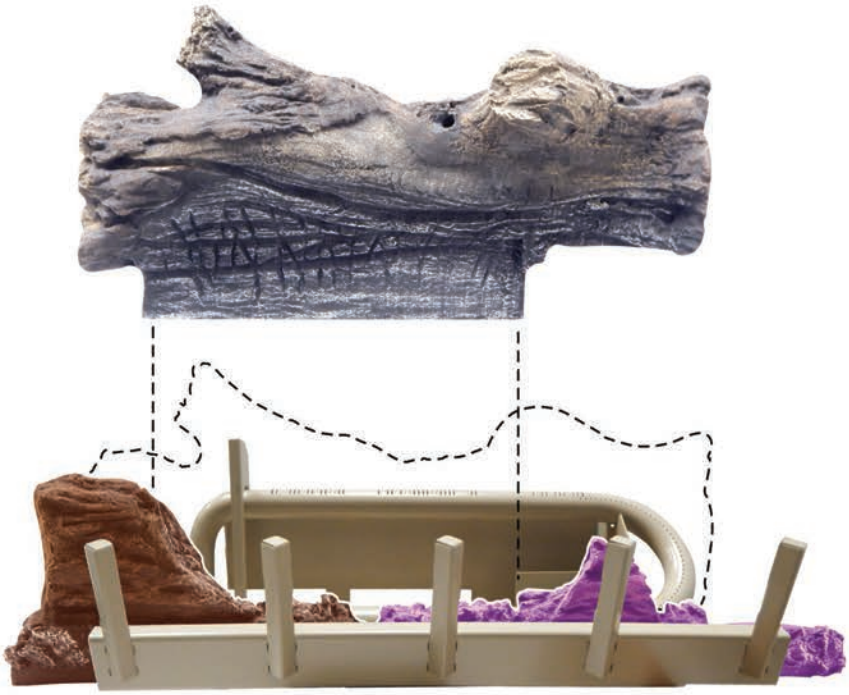

FRONT

# LOG PLACEMENT FOR DVCD36 FIREPLACES

4. Align Log D with the left rear burner bracket, resting on the rear log support. Pull forward slightly to lock the log in place over the top rear burner bracket.

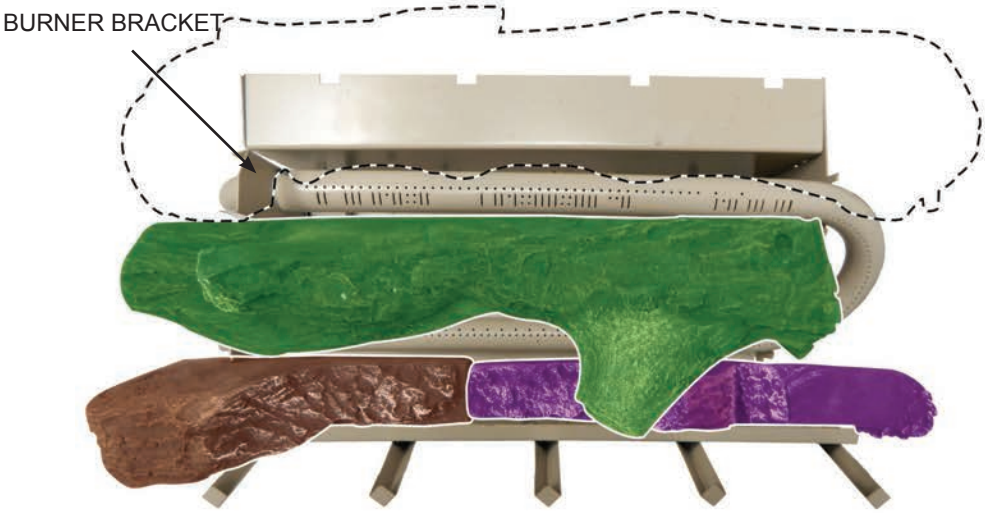


TOP

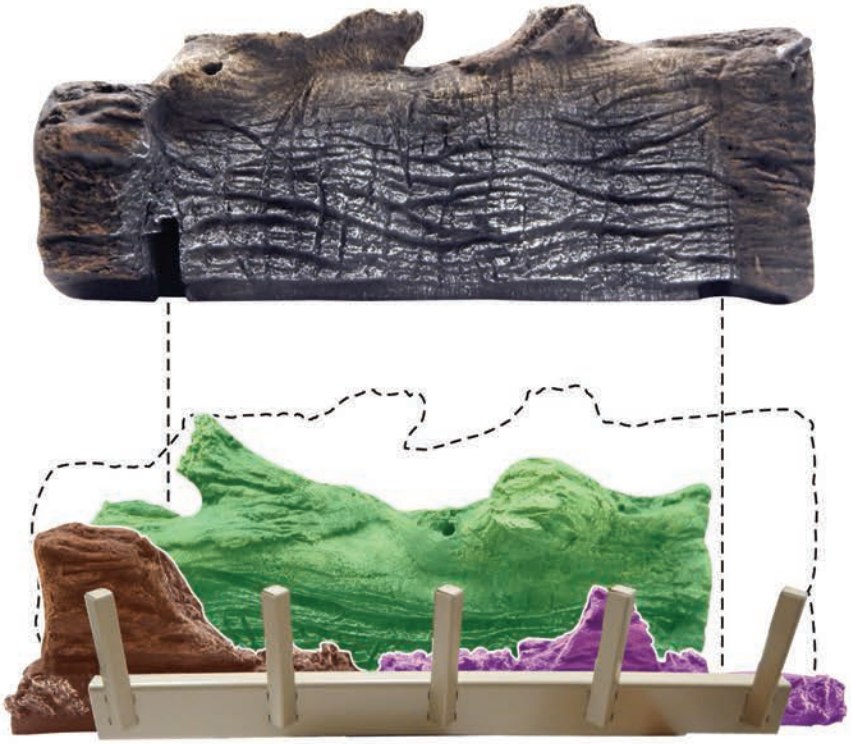

FRONT

# LOG PLACEMENT FOR DVCD36 FIREPLACES

5. Place Log E pin into Log C. Align the top pin of Log D with the hole in Log E. Ensure the lower divet of Log E is placed against the front of the grate.

TOP

FRONT

# LOG PLACEMENT FOR DVCD36 FIREPLACES

6. Place the pin on Log F into the front slot of Log C. The longest arm of the “Y” shape should angle down and rest where it will conseal the separation between Logs A and B.

TOP

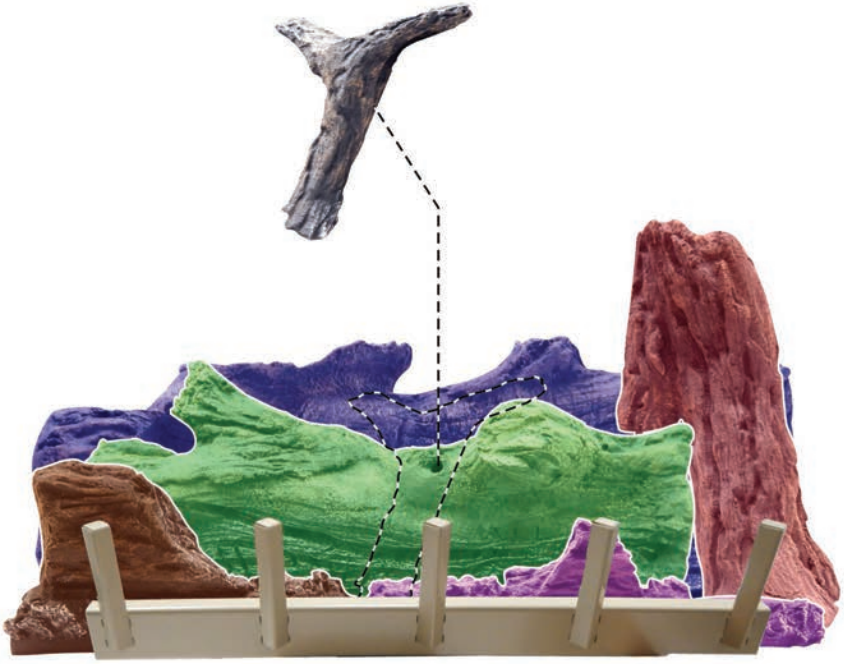

FRONT

# LOG PLACEMENT FOR DVCD36 FIREPLACES

Log placement is complete.

TOP

FRONT

# LOG IDENTIFICATION FOR DVCD42 FIREPLACES

| Log Description | Part Number | Front View | Top View |
|---|---|---|---|
| Log A | 28386 | | |
| Log B | 28387 | | |
| Log C | 28382 | | |
| Log D | 28381 | | |
| Log E | 28383 | | |
| Log F | 28384 | | |
| Log H | 28385 | | |

# LOG PLACEMENT FOR DVCD42 FIREPLACES

This fireplace is supplied with a set of seven ceramic fiber logs. Do not handle these logs with your bare hands! Always wear gloves to prevent skin irritation from ceramic fibers. After handling the logs, wash your hands gently with soap and water to remove any trace of fibers.

**Accessing the Interior of the Fireplace**

1. Remove the barrier screen and glass door. See Barrier Screen and Glass Door Removal, page 80.

The positioning of the logs is critical to the safe and clean operation of this fireplace. Sooting and other problems may result if the logs are not properly and firmly positioned in the fireplace. Please refer to **Figure 73** and the following WARNING when completing log placement instructions. For step by step log placement instructions, see pages 60 - 67.

**⚠ WARNING**

**Failure to position the parts in accordance with this diagram or failure to use only parts specifically approved with this fireplace may result in property damage or personal injury.**

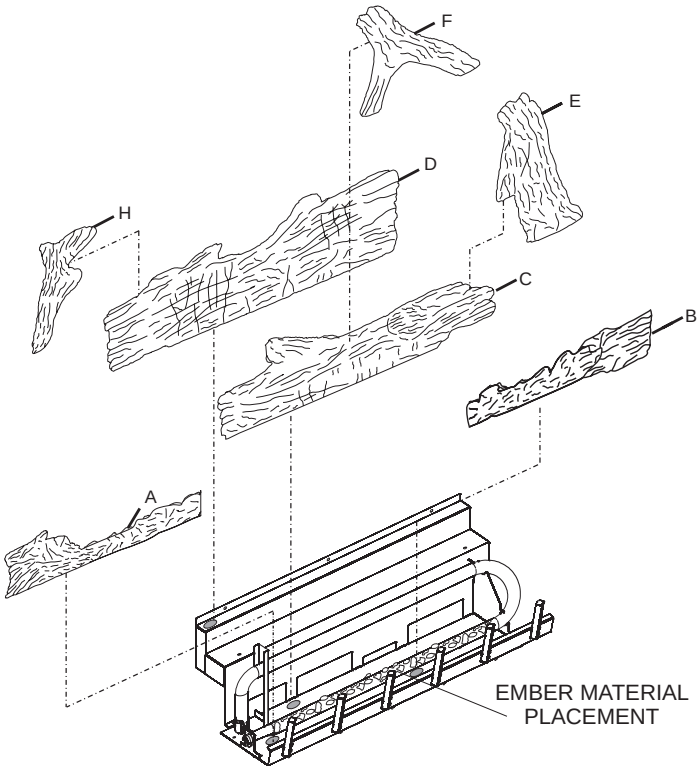


**Figure 73**

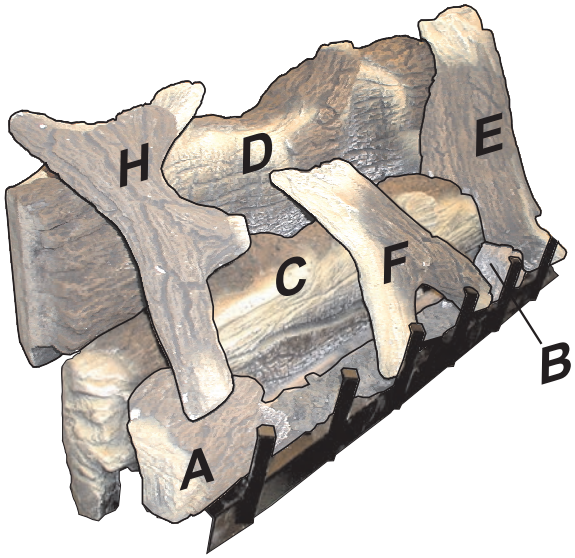


**Figure 74**

**Decorative Material Placement**

1. Position all of the logs before placing the decorative materials.
2. Place the decorative rocks in front of the grates and at the sides of the main burner pan.
3. Carefully separate the ember material into small amounts (no larger than “dime-size” pieces).
4. Place the ember material pieces on the front burner port area. **See Figure 75.**
   a. Fluffed up pieces of ember material one layer thick will produce the best ember glow. Do not place more than one layer of ember material onto the burner ports. Excess ember material will decrease the ember glow effect.
   b. Save any remaining ember material for future applications (as needed).

**Attention:** Do not place decorative rocks on logs or burner. The decorative rocks should only be placed on the fireplace floor.

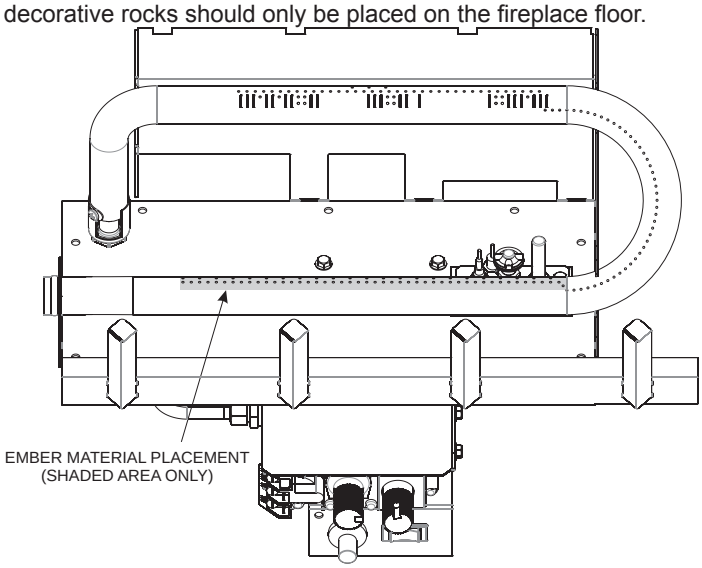


**Figure 75**

# LOG PLACEMENT FOR DVCD42 FIREPLACES

1. Align slot on back of Log A with burner bracket on left front of burner and push Log A toward the front.

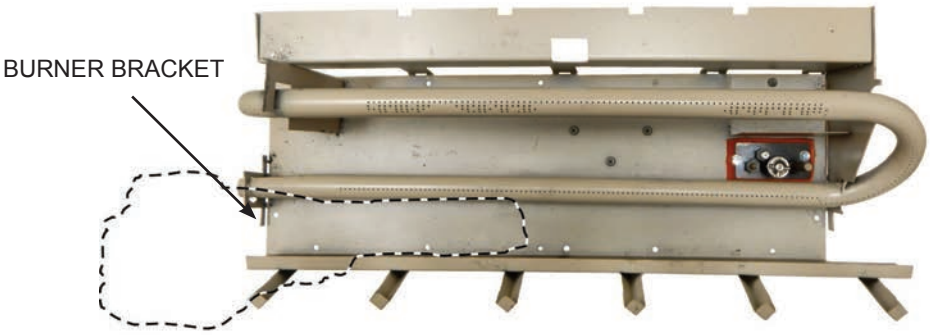


TOP

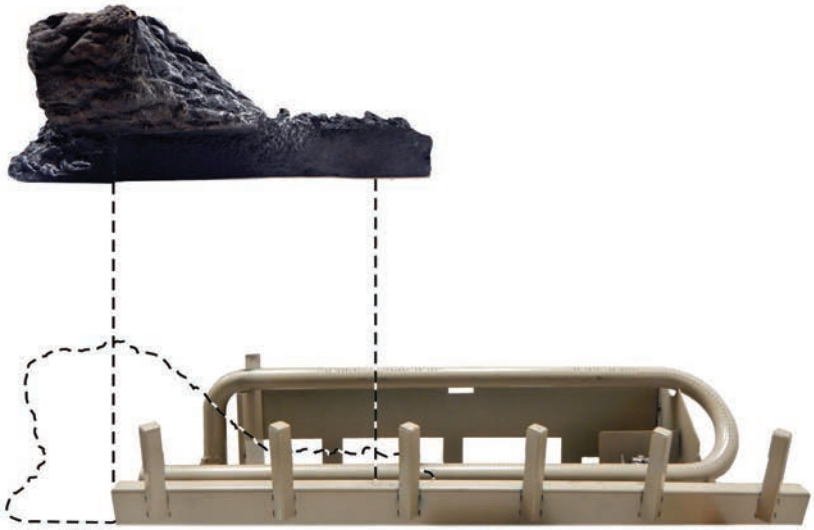

FRONT

# LOG PLACEMENT FOR DVCD42 FIREPLACES

2. Align slot on Log B with the burner bracket on the front right side of the burner. Push Log B towards the front.

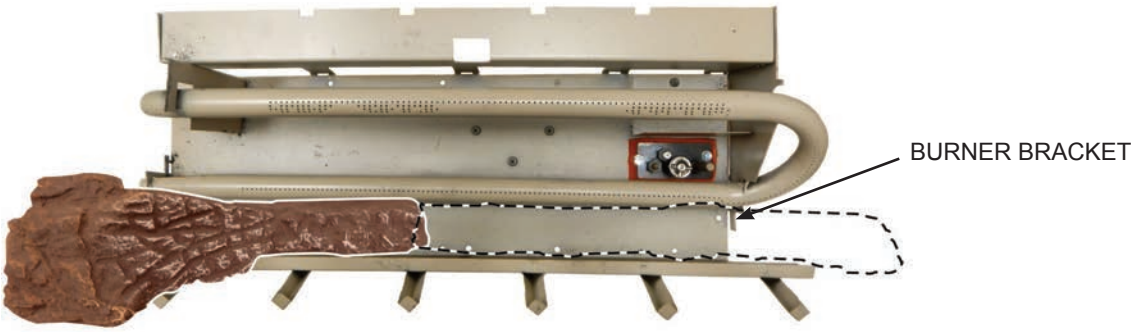


TOP

FRONT

# LOG PLACEMENT FOR DVCD42 FIREPLACES

3. Align Log C slots with burner bracket on the lower left side of burner and slide log to the left until it stops

TOP

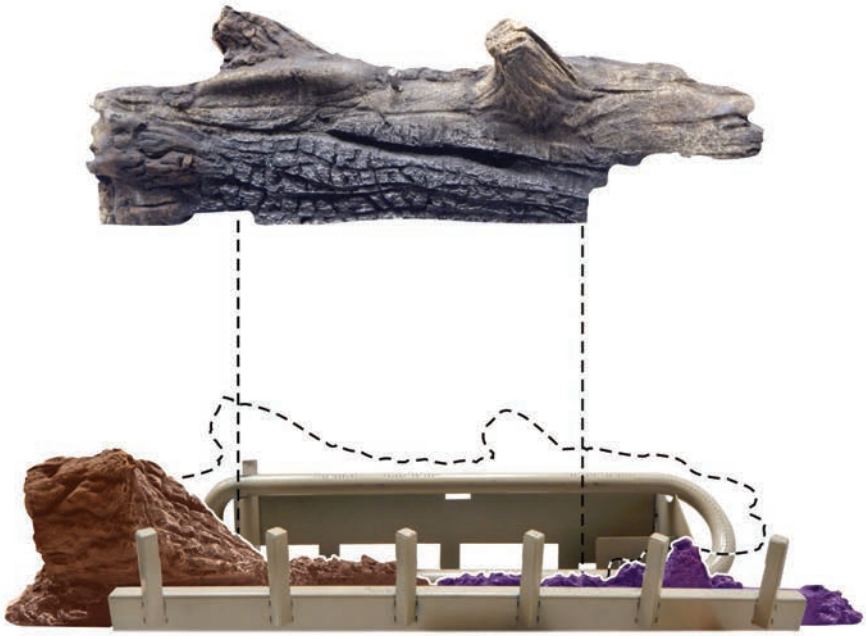

FRONT

4. Align the slot on Log D with the burner bracket on the left side of the burner and pull Log D forward.

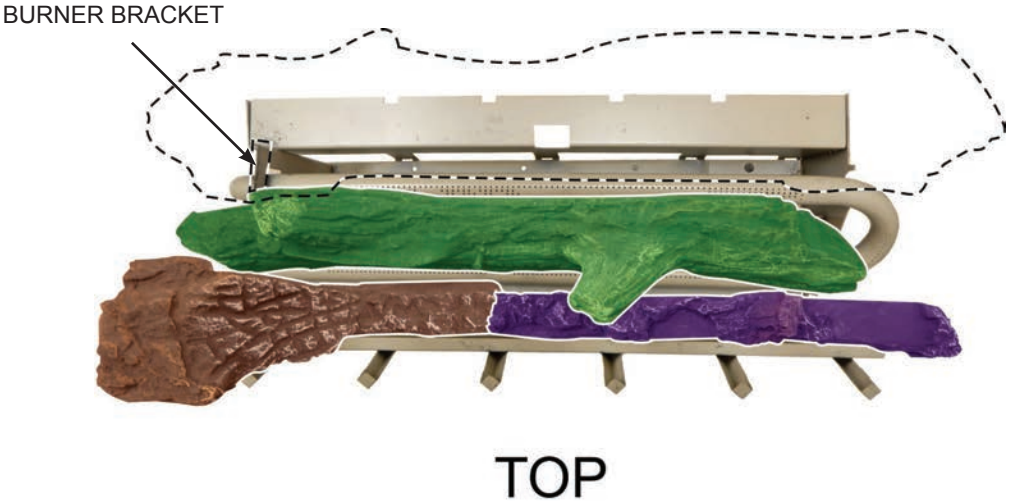


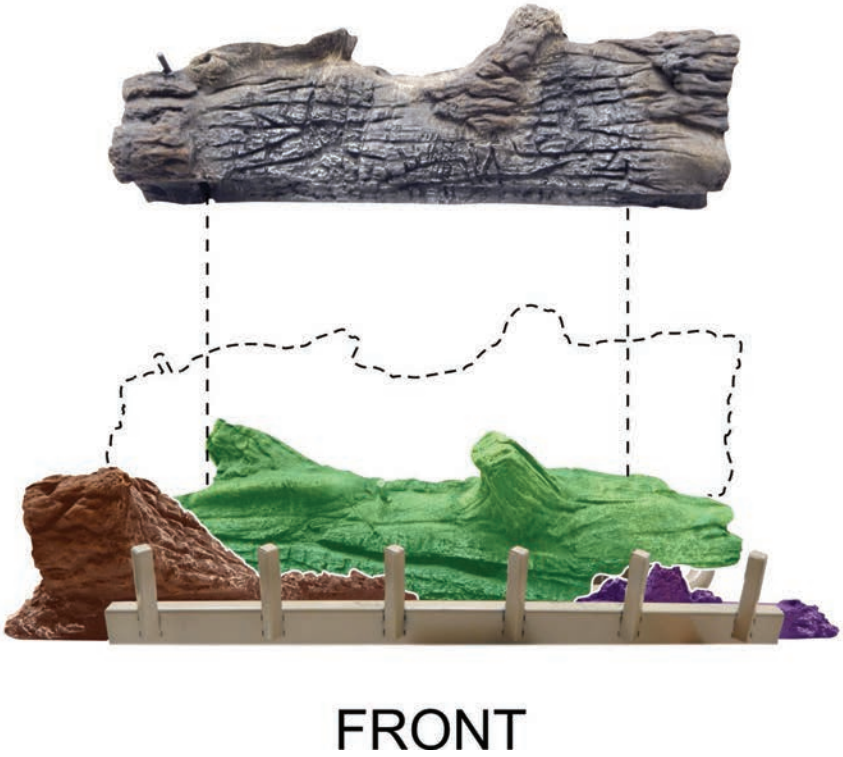

# LOG PLACEMENT FOR DVCD42 FIREPLACES

5. Place Log E onto the pin on the far right of Log D. It should rest on the flat edge of Log C and the flat section of Log B.

TOP

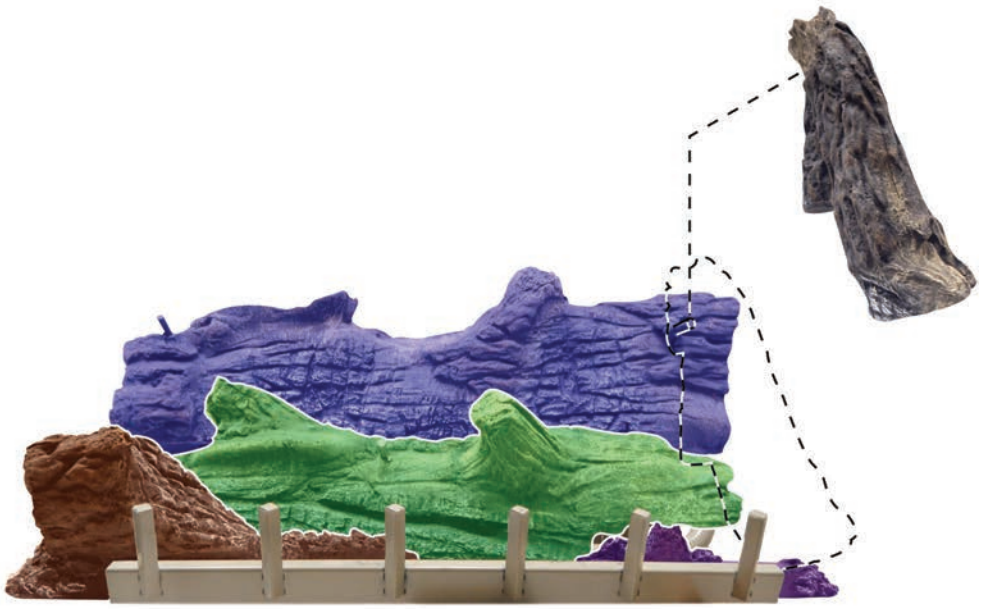

FRONT

# LOG PLACEMENT FOR DVCD42 FIREPLACES

6. Place Log F onto the center pin of Log C. The “Y” shape should appear to be upside down with the two arms placed against the grate tangs to help hold Log C upright.

TOP

FRONT

6. Place Log G onto the upper left pin of Log D. The longest arm should lock into the small notch at the top back of Log A so that Log G holds the back Log (D) upright.

TOP

FRONT

# LOG PLACEMENT FOR DVCD42 FIREPLACES

Log placement is complete.

TOP

FRONT

# MILLIVOLT OPERATING INSTRUCTIONS

**750 Millivolt System**
The standing pilot (750 millivolt system) is a continuous burning pilot. The pilot remains ON even when the main burner is OFF.

When you ignite the pilot ,the thermopile produces millivolts (electrical current) which will energize the magnet in the gas valve. After 30 seconds to 1 minute time period you can release the gas control knob and the pilot will stay ON. Allow your pilot flame to operate an additional one to two minutes before you turn the gas control knob from the PILOT position to the ON position. This time period allows the millivolts to build-up to a sufficient level allowing the gas control to operate properly.

1. Follow the SAFETY and LIGHTING INSTRUCTIONS for standing pilot controls found in this manual and on labels found in the control compartment behind the door assembly.

**⚠ CAUTION**

**During the initial purging and subsequent lightings, never allow the gas valve control knob to remain depressed in the "pilot" position without pushing the piezo ignitor button at least once every second.**

2. During the operating season, leave the control valve knob in the "ON" position. This will allow the pilot flame to remain lit. Turn the burner flame on or off with the fireplace REMOTE/ OFF/ON switch, wall switch or remote controls.

***NOTICE***: The gas control valve allows you to increase or decrease the height of the main burner flame. The control valve has a pressure regulator with a knob as shown in **Figure 76.** Rotate the knob clockwise to "HI" to increase the flame height and counterclockwise to "LO" to decrease the flame height.

3. Turn the REMOTE/OFF/ON switch to "OFF" and the control valve to "OFF" when the operating season is over. The system, including the pilot light, will shut down.

The OWNER should carefully read and follow these operating instructions at all times.

Lower the door assembly to view the gas controls for the fireplace.

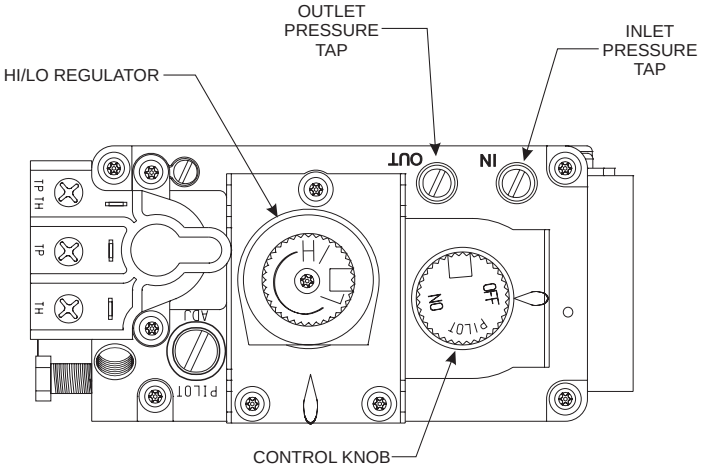


**Figure 76**

**Initial Lighting**
Upon completing the gas line or turning the gas valve on after it has been in the "OFF" position, a small amount of air will be in the lines. When first lighting the fireplace, it will take a few minutes for the lines to purge themselves of this air. Once the purging is complete, the fireplace will light and operate satisfactorily.
Subsequent lightings of the fireplace will not require such purging if the gas valve is not turned to "OFF."

**Pilot Flame**
The thermopile/thermocouple (standing pilot) tips should be covered with flame.

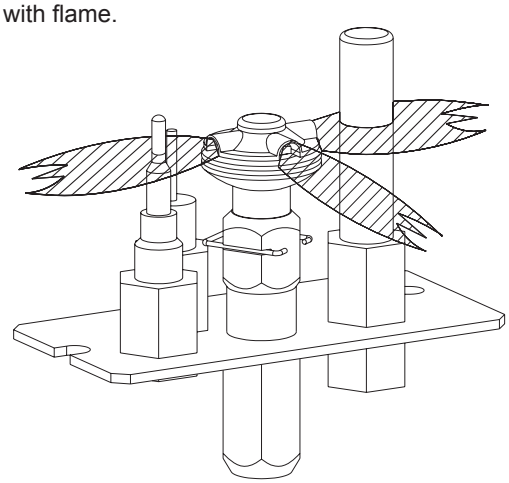

**Figure 77**

**Electric (120 volt) Operated Remote Control, FREC (Optional)**
Connect the green and red, stripped and bare, wires on the REMOTE/OFF/ON switch wire harness to the wires on remote receiver that is a component in the FREC. Turn the REMOTE/ OFF/ON switch to the REMOTE position. Follow instructions in the FREC to complete installation.
***NOTICE***: If the electric (120 volt) fails to the FREC, and immediate heat is desired, turn the REMOTE/OFF/ON switch from the REMOTE position to the ON position.

**Installation of Remote Receiver**
Place remote receiver on the floor of fireplace behind the lower louver assembly or barrier assembly as far forward as possible.

Attention: The Velcro loop and hook are not necessary in this installation but can be used to secure remote receiver.
Refer to remote control installation and operating instructions for more details on remote control.

**Millivolt Control**
The valve regulator controls the burner pressure which should be checked at the pressure test point. Turn captured screw counter clockwise 2 or 3 turns and then place tubing to pressure gauge over test point (Use test point "A" closest to control knob). After taking pressure reading, be sure and turn captured screw clockwise firmly to re-seal. Do not over torque. Check for gas leaks.
Millivolt thermopile is self-generating. Gas valve does not require 24 volts or 110 volts.

# MILLIVOLT OPERATING INSTRUCTIONS

**Check System Operation**
The millivolt system and all individual components may be checked with a millivolt meter, 0-1000 MV range.
It is important to use wire of a gauge proper for the length of the wire:

| Recommended Wire Gauges | |
|---|---|
| **Maximum Length (dimensions in feet)** | **Wire Gauge** |
| 1 to 10 | 18 |
| 10 to 25 | 16 |
| 25 to 35 | 14 |

**STANDING PILOT OPERATING INSTRUCTIONS**
**REMOTE/OFF/ON Switch**
The fireplace is equipped with a REMOTE/OFF/ON switch. A wire harness is attached to the REMOTE/OFF/ON switch. The red, black and green (wires) female push-ons attach to the REMOTE/OFF/ON switch. The black and green (wires) female push-ons attach to the gas valve at the opposite end of the wire harness. An additional green wire and the red wire, which are stripped and bare, will attach to one of the accessories that can be purchased for use with your fireplace.

**Operation of REMOTE/OFF/ON Switch with no Accessories**
To ignite main burner, turn the control knob on the gas valve from the PILOT position to the ON position. Turn the REMOTE/OFF/ON switch from the OFF position to the ON position. The additional green wire and red wire, which are stripped and bare are not used.

**Wall Switch, FWS-1 (Optional)**
Connect the green and red, stripped and bare, wires on the REMOTE/OFF/ON switch wire harness to the wall switch. Turn the REMOTE/OFF/ON switch to the REMOTE position. Pivot the rocker switch on the FWS-1 to the ON position.

**Wall Thermostats (optional)**
TRW - Wireless for Millivolt models
TMV - Reed switch for Millivolt models

**Battery Operated Remote Controls, FRBC, FBRTC, and TRW (Optional)**
Connect the green and red, stripped and bare, wires on the REMOTE/OFF/ON switch wire harness to the remote receiver that is a component in the remote kit. Turn the REMOTE/OFF/ON switch to the REMOTE position. Follow instructions included with the remote to complete installation.

***NOTICE***: If batteries fail in the remote, and immediate heat is desired, turn the REMOTE/OFF/ON switch from the REMOTE position to the ON position.

# MILLIVOLT STANDING PILOT WIRING DIAGRAM

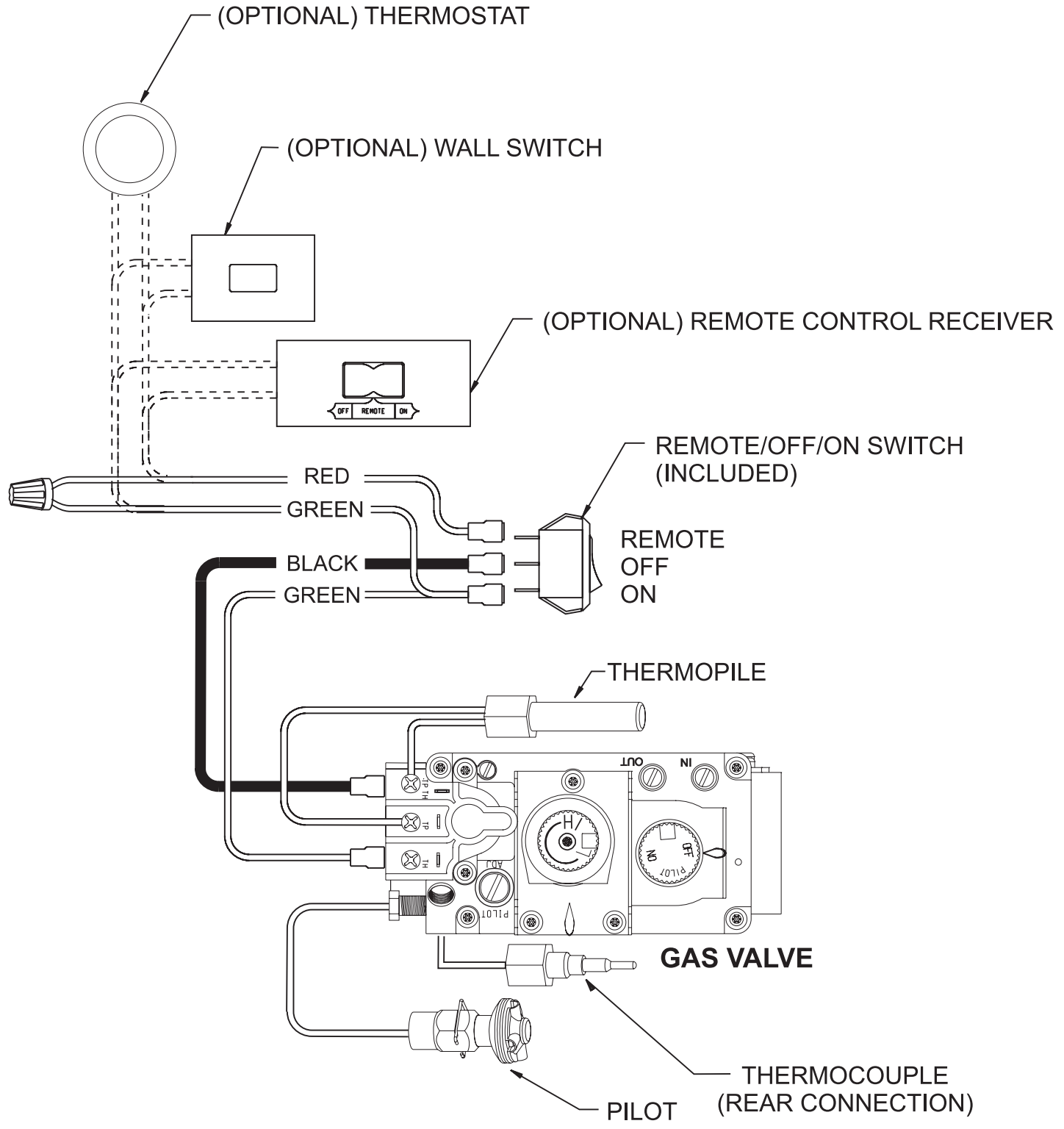


**Figure 78**

If any of the original wire supplied with this fireplace must be replaced, it must be replaced with equivalent gauge and temperature rated wire.

**⚠ CAUTION**

**Label all wires prior to disconnection when servicing controls. Wiring errors can cause improper and dangerous operation.**

Verify proper operation after servicing.

# MILLIVOLT STANDING PILOT LIGHTING INSTRUCTIONS

## FOR YOUR SAFETY READ BEFORE LIGHTING

**⚠ WARNING**

**If you do not follow these instructions exactly, a fire or explosion may result causing property damage, personal injury or loss of life.**

A. This fireplace has a pilot which must be lighted by hand. When lighting the pilot, follow these instructions exactly.

B. Before lighting smell all around the fireplace area for gas. Be sure to smell next to the floor because some gas is heavier than air and will settle on the floor.

What To Do If You Smell Gas
- Do not try to light any appliance.
- Do not touch any electrical switch;
- Do not use any phone in your building.
- Immediately call your gas supplier from a neighbor's phone. Follow the gas supplier's instructions.
- If you cannot reach your gas supplier, call the fire department.

C. Use only your hand to push in or turn the gas control knob. Never use tools. If the knob will not push in or turn by hand, don't try to repair it; call a qualified service technician. Force or attempted repair may result in a fire or explosion.

D. Do not use this fireplace if any part has been under water. Immediately call a qualified service technician to inspect the fireplace and to replace any part of the control system and any gas control which has been under water.

## LIGHTING INSTRUCTIONS

1. Stop! Read the safety information above.
2. Set REMOTE/OFF/ON switch to OFF.
3. Turn off all electric power to the fireplace (if applicable).
4. Open bottom louver if included, or remove the barrier screen assembly.
5. Push in gas control knob slightly and turn clockwise to "OFF."

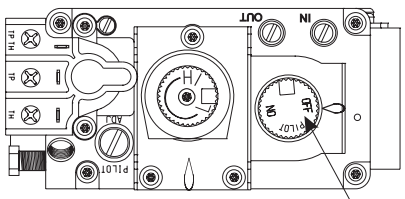


GAS CONTROL KNOB SHOWN IN "OFF" POSITION

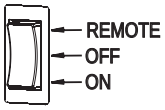


***NOTICE*:** Knob cannot be turned from "PILOT" to "OFF" unless knob is pushed in slightly. Do not force.

6. Wait ten minutes to clear out any gas. Then smell for gas, including near the floor. If you then smell gas, STOP! Follow "B" in the safety information above. If you do not smell gas, go to the next step.
7. Find pilot - Follow metal tube from gas control. The pilot is behind the burner on the right side.
8. Turn gas control knob counterclockwise to "PILOT."

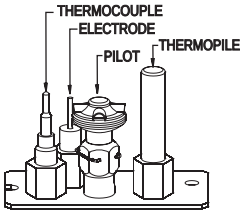


9. Push in control knob all the way and hold in. Repeatedly push the piezo ignitor button until the pilot is lit. Continue to hold the control knob in for about one minute after the pilot is lit. Release knob, and it will pop back up. Pilot should remain lit. If it goes out, repeat steps 5 through 9.
   - If the control knob does not pop up when released, STOP and IMMEDIATELY call a qualified service technician or gas supplier.
   - If the pilot will not stay lit after several tries, turn the gas control knob to "OFF" and call your service technician or gas supplier.
10. Turn gas control knob counterclockwise to "ON."
11. Close bottom louver if included, or replace the barrier screen assembly.
12. Turn on all electric power to the fireplace (if applicable).
13. Set REMOTE/OFF/ON switch to desired setting.

## TO TURN OFF GAS TO FIREPLACE

1. Set REMOTE/OFF/ON switch to OFF.
2. Turn off all electric power to the fireplace if service is to be performed (if applicable).
3. Open bottom louver assembly or remove barrier screen assembly.
4. Push in gas control knob slightly and turn clockwise to "OFF." Do not force.
5. Replace the bottom louver if included, or re-install barrier screen assembly.

# MILLIVOLT STANDING PILOT TROUBLESHOOTING

**With proper installation and maintenance, your new Direct Vent Gas Fireplace will provide years of trouble-free service. If you do experience a problem, refer to the Trouble Shooting Guide below. This guide will assist a qualified service person in the diagnosis of problems and the corrective action to be taken.**

1. **Spark ignitor will not light pilot after repeated triggering of piezo ignitor button.**
   a. Defective ignitor (no spark electrode)
   —Check for spark at electrode and pilot; if no spark and electrode wire is properly connected, replace ignitor.
   b. No gas or low gas pressure.
   —Check remote shut off valves from fireplace. Usually there is a valve near the main. There can be more than one valve between the fireplace and main.
   —Low pressure can be caused by a variety of situations such as a bent line, too narrow diameter of pipe, or low line pressure. Consult with plumber or gas supplier.
   c. No Propane in tank.
   —Check Propane tank. Refill tank.
2. **Pilot will not stay lit after carefully following lighting instructions.**
   a. Defective thermocouple.
   —Check that pilot flame impinges on thermocouple. Clean and/or adjust pilot for maximum flame impingement.
   —Ensure the thermocouple connection at the gas valve is fully inserted and tight (hand tight plus 1/4 turn). Faulty thermocouple if reading is below specified minimum of 15 millivolts.
   —Disconnect the thermocouple from the valve, place one millivolt meter lead wire on the end of the thermocouple and the other millivolt meter lead wire on the thermocouple copper wire. Start the pilot and hold the valve knob in. If the millivolt reading is less than 15 millivolt, replace the thermocouple.
   b. Defective valve.
   —If thermocouple is producing more than 15 millivolts, replace faulty valve.
3. **Pilot burning, no gas to burner, valve knob "ON", REMOTE/OFF/ON switch "ON."**
   a. REMOTE/OFF/ON switch, wall switch, remote control or wires defective.
   —Check REMOTE/OFF/ON switch and wires for proper connections. Place jumper wires across terminal at switch. If burner comes on, replace defective switch. If OK, place jumper wires across switch wires at gas valve-if burner comes on, wires are faulty or connections are bad.
   b. Thermopile may not be generating sufficient millivolts.
   —If the pilot flame is not close enough physically to the thermopile, adjust the pilot flame.
   —Be sure the wire connections from the thermopile at the gas valve terminals are tight and the thermopile is fully inserted into the pilot bracket.
   —Check the thermopile with a millivolt meter. Take the reading at TH-TP & TP terminals of the gas valve. The meter should read 350 millivolts minimum, while holding the valve knob depressed in the PILOT position, with the pilot lit, and the REMOTE/OFF/ON switch in the OFF position. Replace the faulty thermopile if the reading is below the specified minimum.
   —With the pilot in the ON position, disconnect the thermopile leads from the valve. Take a reading at the thermopile leads. The reading should be 350 millivolts minimum. Replace the thermopile if the reading is below the minimum.
   c. Defective valve.
   —Turn valve knob to ON. Place REMOTE/OFF/ON switch to ON. Check with millivolt meter at thermopile terminals. Millivolt meter should read greater than 200 millivolts. If the reading is okay and the main burner does not ignite, replace the gas valve.
   d. Plugged main burner orifice.
   —Check main burner orifice for blockage and remove.
4. **Frequent pilot outage problem.**
   a. Pilot flame may be too high or too low, or blowing (high), causing pilot safety to drop out.
   —Clean and adjust flame for maximum flame impingement on the thermocouple. Follow lighting instructions carefully.
5. **The pilot and main burner extinguish while in operation.**
   a. No Propane in tank.
   Check Propane tank. Refill fuel tank.
   b. Inner vent pipe leaking exhaust gases back into system
   —Check for leaks.
   c. Glass too loose, gasket leaks in corners after usage.
   —Be certain glass assembly is installed correctly.
   d. Horizontal vent improperly pitched.
   —The horizontal vent cap should slope down only enough to prevent any water from entering the fireplace. The maximum downwards slope is 1/4 inch.
   e. Bad thermopile or thermocouple.
   —Replace if necessary.
   f. Improper vent cap installation.
   —Check for proper installation and freedom from debris or blockage.
6. **Glass soots.**
   a. Flame impingement on logs.
   —Check and adjust log position. Contact Empire Comfort Systems.
   b. Glass not sealing.
   c. Debris around throat of main burner.
   —Inspect the opening at the base of the main burner. It is imperative that NO material be placed in this opening.
7. **Flame burns blue and lifts off main burner.**
   a. Insufficient oxygen being supplied.
   —Check to make sure vent cap is installed properly and free of debris. Make sure that vent system joints are tight and have no leaks.
   —Check to make sure that no material has been placed at the main burner base.

**5.25 VDC ELECTRONIC CONTROL VALVE**

The electronic control valve system includes the ability to switch the pilot from a standing pilot mode to an intermittent pilot mode.

- **IPI Mode** - In the Intermittent Pilot mode, when the fireplace is turned ON, it will cause spark to the pilot, light the pilot, then allow the burner to light. When the fireplace is turned to OFF, both the burner and pilot will be OFF.
- **CPI Mode** - In the Continuous Pilot mode, the pilot remains ON continuously even when the burner is turned OFF.

***NOTICE***: A small toggle switch is located on the front of the module tray that is used to switch from IPI (left) to the CPI (right). **See Figure 79.**

When the fireplace is turned to ON, the electrical current will energize a spark to the pilot igniter. Once the pilot sensor heats up (after a few seconds), the valve will be energized, allowing gas to flow to the burner.

1. Follow the SAFETY and LIGHTING INSTRUCTIONS for Intermittent Pilot controls found in this manual, and on labels found in the control compartment located in the lower cavity of the fireplace.

2. During the operating season (or in power outage periods), it is recommended that the pilot remain in the CPI (standing pilot mode) to reduce cold start issues, and/or conserve battery backup power during a power outage.

3. The gas valve has inlet and outlet pressure taps as shown in **Figure 79.** Refer to page 13 for gas pressure requirements.

***NOTICE*:** The gas control has a manual HI/LO flame adjustment knob (regulator) that allows you to increase or decrease the height of the burner flame. **See Figure 79.** Rotate the HI/LO knob counterclockwise to “HI” to increase the flame height, and clockwise to “LO” to decrease the flame height.

**OPTIONAL REMOTE CONTROLS**

Optional remote controls are available for use with this fireplace. It is recommended that the remote receiver be placed either in a wall outlet box with extended wiring, on the fireplace hearth, behind the left side surround panel, or in the control compartment area as far forward in the insert as possible.

The placement options for the remote receiver are given to allow flexibility, however battery life will be extended when the receiver is placed in cooler areas.

To connect the remote receiver to the fireplace, first disconnect the ON/OFF switch wires from the white and green wire connectors and connect the wires from the remote receiver to the green and white wire connectors. **See Figure 79.**

Follow the instructions included with the remote control for programming and other operational information.

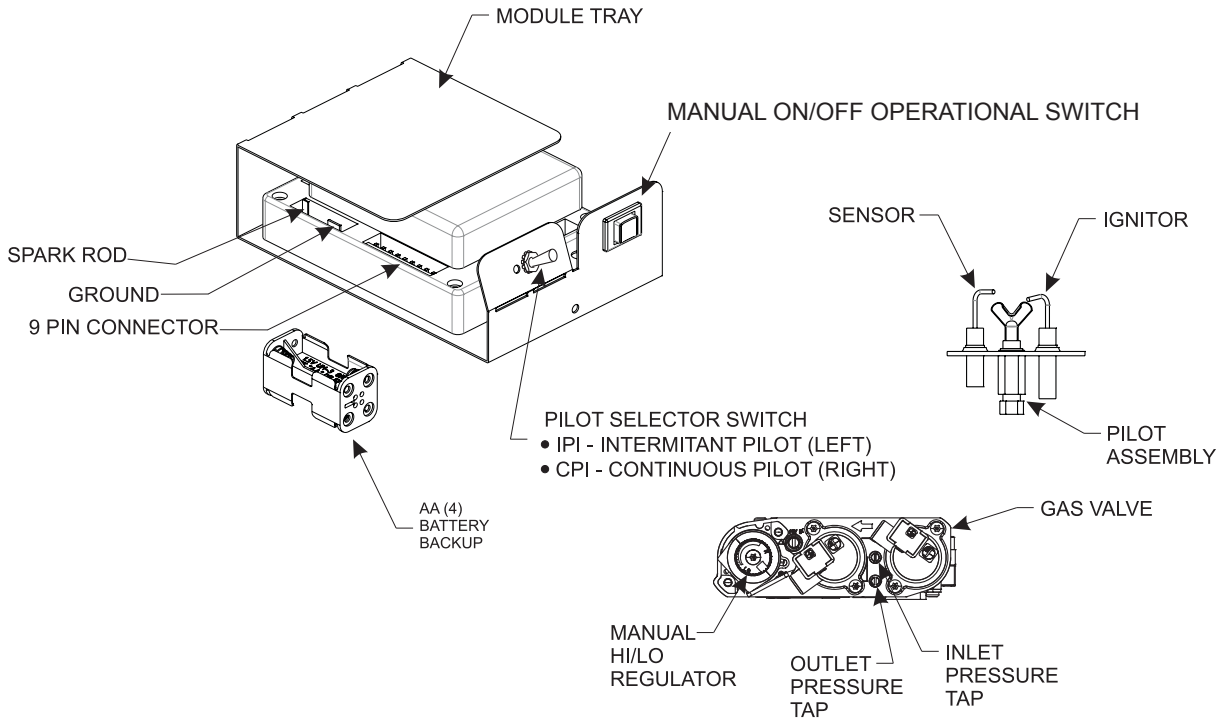


**Figure 79**

# IPI ELECTRONIC SYSTEM WIRING DIAGRAM

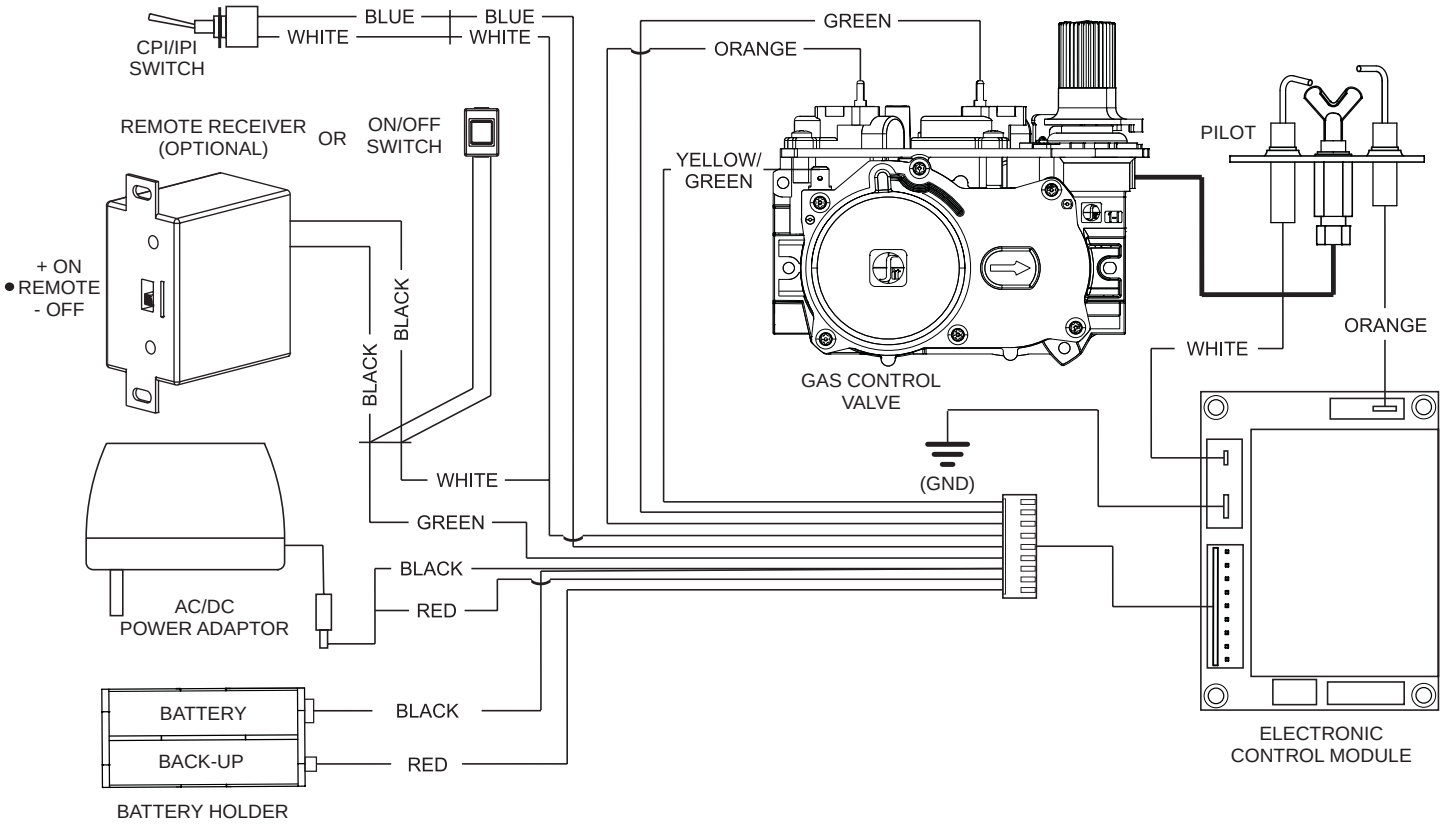


**Figure 80**

If any of the original wire supplied with this fireplace must be replaced, it must be replaced with equivalent gauge and temperature rated wire.

**⚠ CAUTION**

**Label all wires prior to disconnection when servicing controls. Wiring errors can cause improper and dangerous operation.**

Verify proper operation after servicing.

# INTERMITTENT PILOT LIGHTING INSTRUCTIONS

## FOR YOUR SAFETY READ BEFORE LIGHTING

**⚠ WARNING**

**If you do not follow these instructions exactly, a fire or explosion may result causing property damage, personal injury or loss of life.**

A. This fireplace has a pilot which can be lighted with the manual on/off switch, a remote control, or by switching the receiver switch to the “ON” position. When lighting the pilot, follow these instructions exactly.

B. BEFORE LIGHTING smell all around the fireplace area for gas. Be sure to smell next to the floor because some gas is heavier than air and will settle on the floor.
**WHAT TO DO IF YOU SMELL GAS**
Do not try to light any appliance. Do not touch any electrical switch. Do not use any phone in your building. Immediately call your gas supplier from a neighbor’s phone. Follow the gas supplier’s instructions. If you can not reach your gas supplier, call the fire department.

C. Use only the remote control or manual remote receiver switch to operate the gas valve. Never use tools. If valve does not operate, don’t try to repair it, call a qualified service technician. Force or attempted repair may result in a fire or explosion.

D. Do not use this fireplace if any part has been under water. Immediately call a qualified service technician to inspect the fireplace and to replace any part of the control system and any gas control which has been under water.

## LIGHTING INSTRUCTIONS

1. STOP! Read the safety information above.
2. Turn OFF electric power to the fireplace.
3. Open bottom louver if included, or remove the barrier screen assembly.
4. Turn gas valve counterclockwise to “On” position.
5. Wait ten minutes to clear out any gas. Then smell for gas, including near the floor. If you smell gas, STOP! Follow “B” in the safety information above on this page. If you do not smell gas, go to the next step.
6. Turn ON electric power to the fireplace.
7. Find pilot - Follow metal tube from gas control. The pilot is behind the burner on the right side.
8. Turn main flame to on. If the pilot does not light within 60 seconds, stop and go to Step 5.
9. Refer to remote control instructions for detailed information, control features, and operation. ***NOTICE***: There is a CPI/IPI switch that allows for a continuous standing pilot mode or an intermittent pilot mode. See fireplace manual for location of this switch. If the pilot or burner does not stay lit (in the standing pilot mode), stop and immediately call a qualified service technician or gas supplier.
10. If the burner or pilot does not operate properly after several tries, turn the gas valve clockwise to “OFF” and call your service technician or gas supplier.
11. Replace the bottom louver assembly, or barrier screen assembly.
12. Operation of the gas valve is controlled by a manual on/off switch or a hand held remote control. Refer to remote instructions for detailed operation information.

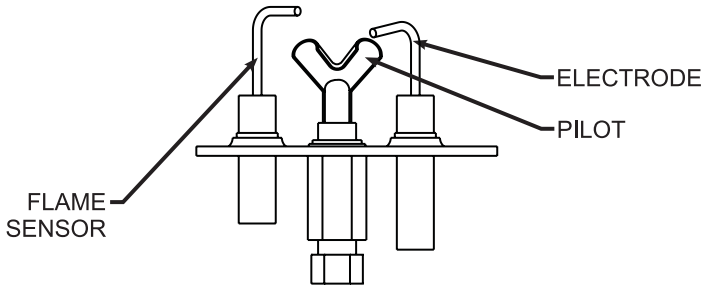


**GAS SHUT-OFF VALVE**

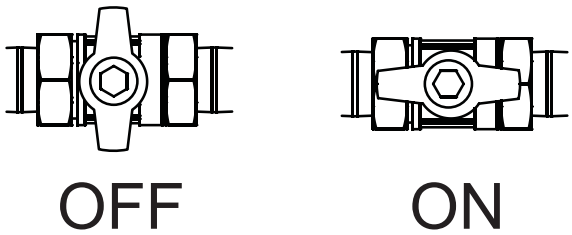


## TO TURN OFF GAS TO FIREPLACE

1. Turn off all electric power to the fireplace if service is to be performed (if applicable).
2. Gain access to control compartment. Open bottom louver assembly if included, or remove the barrier assembly.
3. Locate On/Off gas valve and turn clockwise to “OFF”. Do not force.
4. Close bottom louver assembly if included, or replace the barrier screen assembly.

# INTERMITTENT PILOT CONTROL SYSTEM TROUBLESHOOTING

**Brief Description of the Components**

The gas valve is fitted with a manual HI/LO knob to allow for manual modulation of the gas outlet pressure to the fireplace burner. The controls are designed to be used with either Propane or Natural Gas and can be converted by use of an OEM supplied conversion kit.

The Digital Fireplace Control (DFC) is an automatic gas ignition system based on a single micro-controller core. This control manages all functions related to ignition, flame sensing and supervision for atmospheric applications.

The DFC can be set to provide continuous or intermittent ignition control sequences and flame monitoring with safety shutdown in case of failure.

The DFC is set up as a stand alone (AC powered system with battery back up. See Lighting Instructions on page 75 and Wiring Diagram on page 74.

**Troubleshooting**

Before proceeding with the procedures in the following troubleshooting table, verify that the power supply (AC/DC adapter) is present and that the batteries inside the receiver and/or optional battery pack are fresh and installed with correct polarity.

Make sure all the connections between the wire harnesses and system components are proper and positive.

Verify that the static inlet pressure meets the manufacturer's recommended inlet pressure. If necessary adjust the line pressure regulator.

If the recommended actions for the following troubleshooting chart do not help to address the problem consider replacing wiring harnesses.

**⚠ WARNING**

**Any actions performed on the gas valve must be in accordance with this instruction manual. Likewise, any actions performed on the DFC or other system components must be done in accordance with the individual component instructions. Replacement of components must be performed in accordance with this instructions manual.**

# INTERMITTENT PILOT CONTROL SYSTEM TROUBLESHOOTING

| PROBLEM OBSERVED | POSSIBLE CAUSE | CORRECTIVE MEASURE |
|---|---|---|
| Gas odor during setup | Gas Leak | **WHAT TO DO IF YOU SMELL GAS**<br>**Do not try to light any appliance.**<br>**Do not touch any electrical switch; do not use any phone in your building.**<br>**Leave the building immediately.**<br>**Immediately call your gas supplier from a neighbor's phone. Follow the gas supplier's instructions.**<br>**If you cannot reach your gas supplier, call the fire department.** |
| Gas odor before first ignition | Gas Leak | |
| Fireplace is "on" but no flame and pilot is not trying to light | Gas Line Valve turned "off" | Turn shutoff valve to "open" position |
| | Control module in "lockout" | Turn fireplace "off" and then back "on" |
| Pilot continues to spark when pilot is lit. | Not enough gas to pilot | Wait for pilot flame to strengthen |
| | Low Gas Pressure | Check pressures. See page 12. |
| | Pilot igniter/sensor is dirty | Clean pilot. See maintenance page 79. |
| | Pilot not grounded well | Check ground connections |
| | Draft in firebox | Vent restrictor not installed |
| | Pilot sensor has been bent | Replace pilot |
| Pilot will not ignite, or will not stay lit | Pilot igniter/sensor is dirty | Clean flame sensor and pilot igniter. See maintenance page 79. |
| | Pilot not grounded well | Check ground connections |
| | Sensor Wire loose | Check sensor wire terminals |
| | Gas pressure incorrect | Adjust gas pressure |
| | Pilot Gas Line bent or kinked | Replace pilot tube |
| | Faulty pilot, Sensor bent | Replace Pilot |
| | Faulty valve | Replace Valve |
| Burner takes too long to fully light | Low gas pressure | Check gas supply pressure |
| | Clogged or dirty carryover/burner ports | Clean ports |
| | Blocked orifice | Check orifice opening |
| | Faulty valve | Replace valve |
| Burner does not light but pilot remains on | Low gas pressure | Check gas supply pressure |
| | Clogged or dirty burner ports | Clean burner ports |
| | Blocked orifice | Check orifice opening |
| | Loose wire connections | Check valve/control module connections |
| | Faulty pilot | Replace pilot |
| | Faulty valve | Replace valve |
| Burner lights but does not stay lit while pilot remains on | Low gas pressure | Check gas supply pressure |
| | Loose sensor wire | Check wire connection |
| | Faulty valve | Replace valve |
| | Faulty pilot or thermocouple | Replace Safety pilot |
| | Clogged or dirty burner ports | Clean burner ports |
| | (For fireplace equipped with optional thermostat or thermostat remote) Room temperature is higher than thermostat setting | Move (optional) remote away from fireplace |
| | | Set higher temperature on (Optional) remote/thermostat |
| | (Optional) Remote control batteries failing | Replace batteries in remote transmitter and receiver |

# INTERMITTENT PILOT CONTROL SYSTEM TROUBLESHOOTING

| | | |
|---|---|---|
| Burner & pilot light but will not stay lit | Flame sensor dirty | Clean pilot sensor |
| | Low gas pressure | Check gas supply pressure |
| | Not enough fresh air for pilot | Open door or window - ventilate |
| | Clogged or dirty burner ports | Clean burner ports |
| | (For fireplace equipped with optional thermostat or thermostat remote) Room temperature is higher than thermostat setting | Move (optional) remote away from fireplace |
| | | Set higher temperature on (Optional) remote/thermostat |
| | (Optional) Remote control batteries failing | Replace batteries in remote transmitter and receiver |
| | Faulty pilot or thermocouple | Replace pilot |
| Incorrect burner flame | Incorrect gas supply or pressure | Check gas supply pressure |
| | Blocked orifice | Check orifice opening |
| | Clogged or dirty burner ports | Clean burner ports |
| | Faulty valve | Replace valve |
| | High altitude | Adjust orifice size for altitude |
| Backfire of burner | Blocked orifice | Check orifice opening |
| | Clogged or dirty burner ports | Clean burner ports |
| | Low gas pressure | Check gas supply pressure |
| Fireplace produces unwanted odors | Vapors from paint, hairspray, glue, etc. | Ventilate room until odor stops. Do not use paint, hairspray, glue, etc around fireplace |
| | Initial burn-off of manufacturing chemicals | Ventilate room until odor stops |
| Whistle noise from fireplace | Check gas pressure | Adjust gas pressure to recommended setting. |
| | Air in gas line | Bleed lines |
| | Control knob not in fully open position | Open control knob to full position |
| | Spiral gas flex line pinched or too small diameter line | Straighten flex line where pinched or replace gas feed line with larger diameter |

# MAINTENANCE & SERVICE - QUALIFIED SERVICE PERSON

**PLEASE NOTE**
It is normal for fireplaces fabricated of steel to give off some expansion and/or contraction noise during the start up or cool down cycle. Similar noises are found with your furnace heat exchanger or car engine.

It is not unusual for your gas fireplace to give off some odor the first time it is burned. This is due to the curing of the paint and burning off of any undetected oil from the manufacturing process. Ensure that your room is well ventilated - open all windows.

**Empire recommends that you burn the fireplace for at least six hours the first time you use it. If an optional fan kit has been installed, set the fan control in the "OFF" position during this initial burning.**

IMPORTANT: Turn off gas before servicing this fireplace. A qualified service person should perform these check-ups at the beginning of each heating season.

- **Clean Burner and Control Compartment**
  Keep the control compartment, logs, and burner areas surrounding the logs clean by vacuuming or brushing at least twice a year.
  **Cleaning Procedure:**
  1. Turn off pilot light at gas valve.
  2. Remove the barrier screen and glass front. See Barrier Screen and Glass Removal on page 80.
  3. Vacuum burner compartment. Use a soft bristle brush (a paint brush) to clear dust and debris from the log set and decorative media.
     a. It may be necessary to remove the logs from the fireplace to clean it fully. Refer to the Log Placement section, pages 39 - 67.
  4. Reinstall the glass front and barrier screen. See page 81.
  5. Ignite the pilot. See Lighting Instructions, pages 71 and 75.
  6. Turn the fireplace to "ON." If the flame appears abnormal, or the fireplace does not operate properly, STOP and call a service person.

- **Check Vent System**
  The fireplace and venting system should be inspected before initial use and at least annually by a qualified service person. Inspect the external vent cap on a regular basis to make sure that no debris interferes with the air flow.

**Clean the Logs**

**⚠ WARNING**

**Do not handle the logs with your bare hands! Always wear gloves to prevent skin irritation from ceramic fibers. After handling logs, wash your hands gently with soap and water to remove any trace of fibers. If you do get a "fiber splinter" from the logs or glowing embers, rub the sticky side of tape over where you suspect the splinter is until you no longer feel the irritation.**

The logs included with the fireplace can be cleaned with a soft brush (i.e. a soft paint brush) or carefully with "canned air". When cleaning the logs, wear eye and respiratory protection as well as safety gloves.

**Install the Logs**
The position of the logs is critical to the safe and clean operation of this fireplace. Sooting and other problems may result if the logs are not properly and firmly positioned in the fireplace. Refer to the log placement section in this manual for proper log set installation.

**Clean the Pilot**
Use compressed air to clean the pilot.

**Clean the Flame Sensor**
Wipe the flame sensor with a damp paper towel.

**Glass Cleaning**
During start-up condensation may form on the inside of the glass and cause lint, dust and other airborne particles to cling to the glass surface. The initial paint curing process may deposit a slight film on the glass. It is recommended that the glass be cleaned two or three times with a cleaner specifically made for fireplace glass. After the initial cleaning, the glass should be cleaned two or three times during each heating season depending on the circumstances present.

**General Glass Information**

**⚠ WARNING**

**Do not operate fireplace with the glass front removed, or if it is cracked or broken. Replacement of the glass should be done by a licensed or qualified service person.**

Only glass approved for use by the manufacturer in the fireplace may be used for replacement. The glass replacement should be done by a licensed or qualified service person.

**⚠ WARNING**

1. **The use of substitute glass will void all product warranties.**
2. **Care must be taken to avoid breakage of the glass.**
3. **Under no circumstances should this fireplace be operated without the glass front or with a broken glass front. Replacement of the glass (with gasket) as supplied by the manufacturer should be done by a qualified service person.**
4. **Do not abuse the glass by striking or hitting the glass.**

**⚠ WARNING**

**Do not use abrasive cleaners on glass. Do not attempt to clean glass when glass is hot.**

**⚠ WARNING**

**Glass must be cleaned with ammonia-free cleaner. Ammonia will etch or stain glass when heated.**

**Barrier Screen and Glass Door Removal**

1. Grasp the sides of the screen at the bottom and carefully lift it up and out. Place the screen in a safe location.

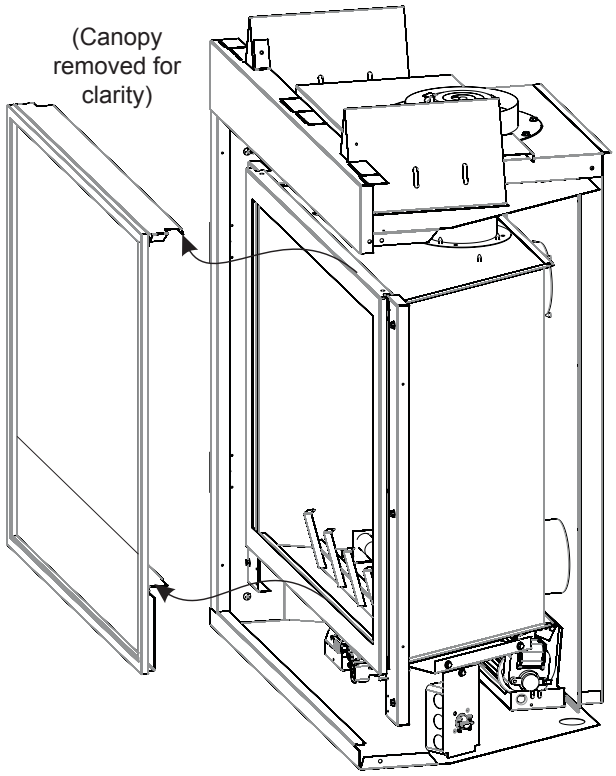


**Figure 81**

2. Find the two glass frame clamps on the bottom of the fireplace.
3. Pull each clamp forward and down to release the glass frame.

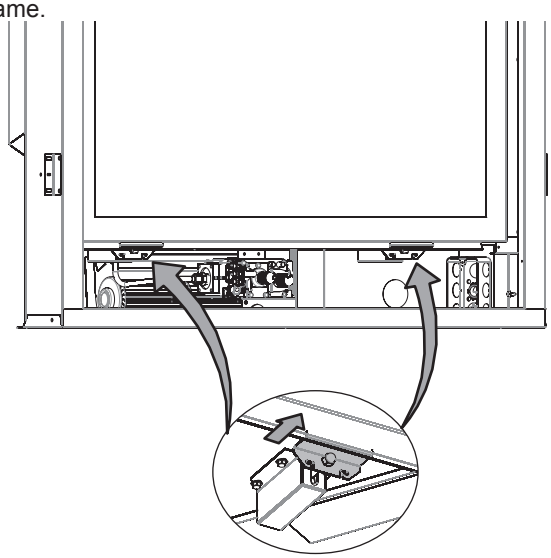

**Figure 82**

4. Grasp the bottom edge of the glass frame and carefully pull the bottom of the glass away from the fireplace.
5. Move your hands to the sides of the glass frame and lift it up and away from the fireplace. **See Figure 83.**

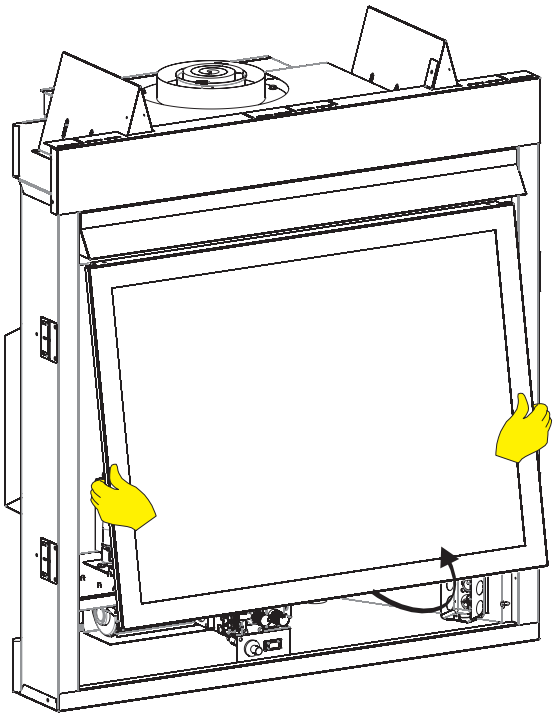

**Figure 83**

**Glass Door and Barrier Screen Installation**

1. Place the top ledge of the glass frame over the frame ledge on the fireplace.
2. Gently lower the glass frame into place. **See Figure 84** for proper glass frame placement.

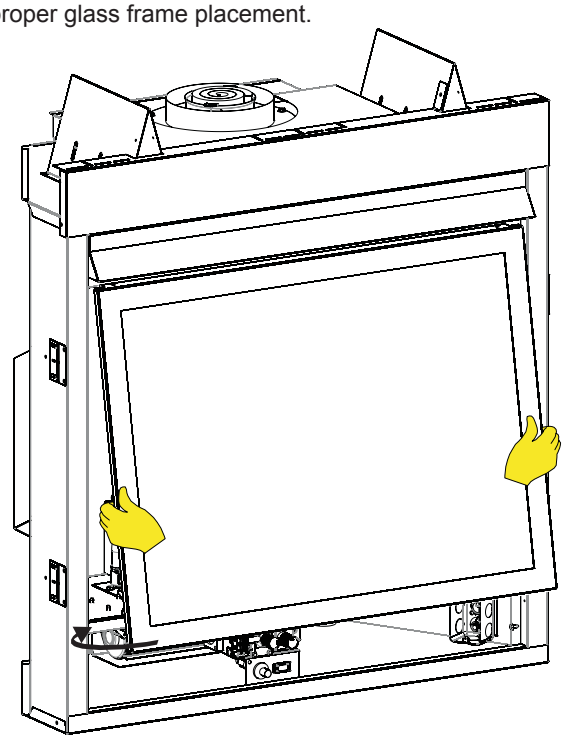

**Figure 84**

***NOTICE***: If improperly placed, the gasket will prevent the bottom of the glass frame from contacting the fireplace.

3. Find the two glass frame clamps on the bottom of the fireplace.
4. Pull each clamp down and then over the glass frame.

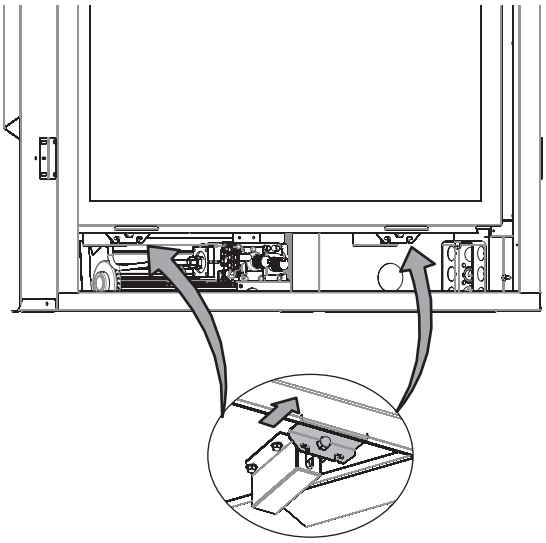

**Figure 85**

5. Place the top ledge of the barrier screen over the top edge of the glass frame and carefully lower it over the fireplace front.

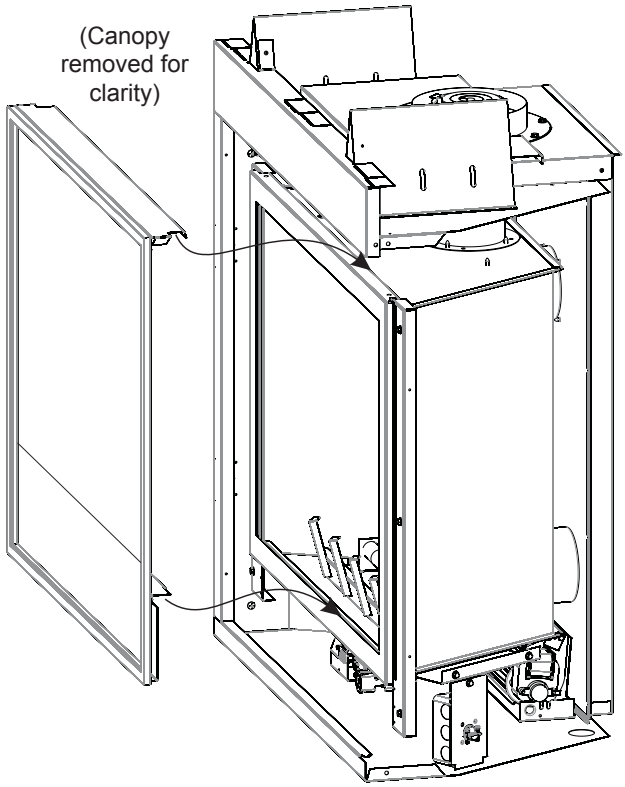


**Figure 86**

**FOR THE INSTALLER**

**Maintenance Precautions**

Installation and repair should be done by a qualified service person. The fireplace should be inspected before use and at least annually by a qualified service person. More frequent cleaning might be required due to excessive lint from carpeting, bedding material, etc.

Keep burner and control compartment clean.

Examine venting system periodically and replace damaged parts.

Make a periodic visual check of pilot and burners. Clean and replace damaged parts.

**Damaged Fireplace**

Do not use this fireplace if any part has been under water. Immediately call a qualified service technician to inspect the fireplace and to replace any part of the control system and any gas control which has been under water.

In the event of a natural disaster (tornado, earthquake, fire, etc.) have a qualified technician inspect the fireplace for damage or potential gas leaks. Repair or replace any damaged components before operating this fireplace.

**Annual Inspection**

- Have the fireplace inspected annually before use.
- More frequent inspection and cleaning may be required if the fireplace is installed in an area exposed to pet hair or dust, or to excessive lint from new carpeting or bedding materials.

**During The Annual Checkup, The Technician Will:**

- Inspect the pilot (flame safety system) and burner(s) for proper operation and replace any damaged parts.
- Test and measure the flame failure response time of the flame safety system. It must de-energize the safety shut-off in no more than 30 seconds.
- Vacuum and clean any foreign debris in the firebox that is not supposed to be there.
- Inspect and ensure that the lighting of the main burner occurs within 4 seconds of the gas valve opening. Visual inspection should match the information illustrated in the manual. Inspect primary air openings for blockage.
- Check the glass and gasket for proper seal.
- Clean Glass with a suitable fireplace glass cleaner. Abrasive cleaners must not be used. Be careful not to scratch the glass when cleaning.
- Check all latches or other door retention components for proper operation, tension, and relief mechanisms are free from obstructions. **See Figures 84 and 85.**
- Check the barrier screen for fit and structural integrity. **See Figure 86.**
- Inspect the log set (if applicable) and decorative media (if applicable) for debris or damage.
- Freshen up the glowing embers if applicable.
- Replace batteries in the remote transmitter and receiver if applicable.
- Inspect the venting and vent termination cap for damage, corrosion, sooting, or obstruction and correct if present.
- Check all accessible gas-carrying tubes, connections, pipes and other components for leaks.
- *In addition, clean and inspect the fireplace following any remodeling work in your home.*

# DVCD32FP(3,7) PARTS LIST

| INDEX NO. | PART NUMBER | | DESCRIPTION |
|---|---|---|---|
| | MV (FP3 | IP (FP7 | |
| 1 | R7654 | R7654 | Flue Insulation |
| 2 | 17425 | 17425 | Flue Insulation Retainer |
| 3 | R7566 | R7566 | Inlet Vent Adaptor |
| 4 | R7573 | R7573 | Inlet Vent Gasket |
| 5 | 17155 | 17155 | Flue Outlet Assembly |
| 6 | M163 | M163 | Flue Connector Gasket |
| 7 | 17142 | 17142 | Vent Cover Plate |
| 8 | R7575 | R7575 | Vent Cover Plate Gasket |
| 9 | 17141 | 17141 | Flue Cover Plate |
| 10 | R7574 | R7574 | Flue Outlet Gasket |
| 11 | 23219 | 23219 | Top Standoff (2 Required) |
| 12 | 36179 | 36179 | Top Shield |
| 13 | 28688 | 28688 | Nailing Flange (4 Required) |
| 14 | 36190 | 36190 | Side Standoff (2 Required) |
| 15 | 36194 | 36194 | Top Panel |
| 16 | 37020 | 37020 | Hood (Canopy) |
| 17 | 17172 | 17172 | Glass Door Frame Assembly |
| 18 | 36171 | 36171 | Barrier Screen Assembly |
| 19 | 17174 | 17174 | Baffle, Flue Vent |
| 20 | 36197 | 36197 | Heat Shield, Firebox |
| 21 | 17357 | 17357 | Junction Box Shield |
| 22 | 29057 | 29057 | Spring Latch Assembly |
| 28 | R7580 | R7580 | Burner Tube |
| 29 | 17235 | 17235 | Log Locator Bracket |
| 30 | 33950 | 33950 | Burner Base Plate Assembly |
| 31 | R7624 | R7624 | Air Shutter |
| 32 | P254 | P254 | Orifice Natural Gas |
| 32 | P287 | P287 | Orifice Propane Gas |
| 33 | R7572 | R7572 | Jamb Nut |
| 34 | P212 | P212 | Orifice Fitting |
| 35 | 17258 | 31570 | Tubing Assembly, Inlet |
| 36 | R2423 | R2423 | Male connector |
| 37 | R7577 | R11125 | Gas Valve Natural Gas |
| 37 | R7578 | R11126 | Gas Valve Propane Gas |
| 38 | 17161 | 29400 | Valve Bracket |
| 39 | 17318 | 17318 | Pilot Shield |
| 40 | R7612 | R10423 | Pilot Assembly Natural Gas |
| 40 | R7611 | R10424 | Pilot Assembly Propane Gas |
| 41 | R7617 | R9189 | Pilot Gasket |
| 42 | R9760 | N/A | Piezo Ignitor |
| 43 | R3436 | N/A | Remote OFF/ON Switch |
| 45 | N/A | R11122 | Battery Holder |
| 46 | R10947 | N/A | Wire Assembly |

| INDEX NO. | PART NUMBER | | DESCRIPTION |
|---|---|---|---|
| | MV (FP3) | IP (FP7) | |
| 46 | N/A | R2522 | ON/OFF Switch |
| 47 | N/A | R11127 | Control Module |
| 48 | 36177 | 34109 | Valve Heat Shield |
| 49 | 17162 | 17162 | Junction Box Assembly |
| 50 | R3492 | R3492 | Receptacle, 3-Prong |
| 51 | N/A | R2566 | Wire 5-1/2 inch Black (Switch) (2 Required) |
| 52 | N/A | R11123 | Wire Harness (Control Module) |
| 53 | N/A | 29382 | Tray, Control Module |
| 54 | N/A | R11128 | AC Adaptor, 7.0 VDC |
| 55 | N/A | R11034 | Wire Assembly (Sensor Adapter) |
| 56 | N/A | 31300 | Pilot Bracket |
| NS | 28366 | 28366 | Log Set |
| NS | R3491 | R3491 | Junction box Cover |
| NS | 18704 | 18704 | Decorative Rock |
| NS | 15999 | 15999 | Rock Wool (2 req) |
| NS | R7591 | R7591 | Flex Line |

N/A - Not applicable for that model
NS - Not shown on the parts view

**See Page 39 for Log Part Numbers, Page 40 for Log Postions.**

**USE ONLY MANUFACTURER'S REPLACEMENT PARTS. USE OF ANY OTHER PARTS COULD CAUSE INJURY OR DEATH.**

# DVCD32FP(3,7) PARTS VIEW

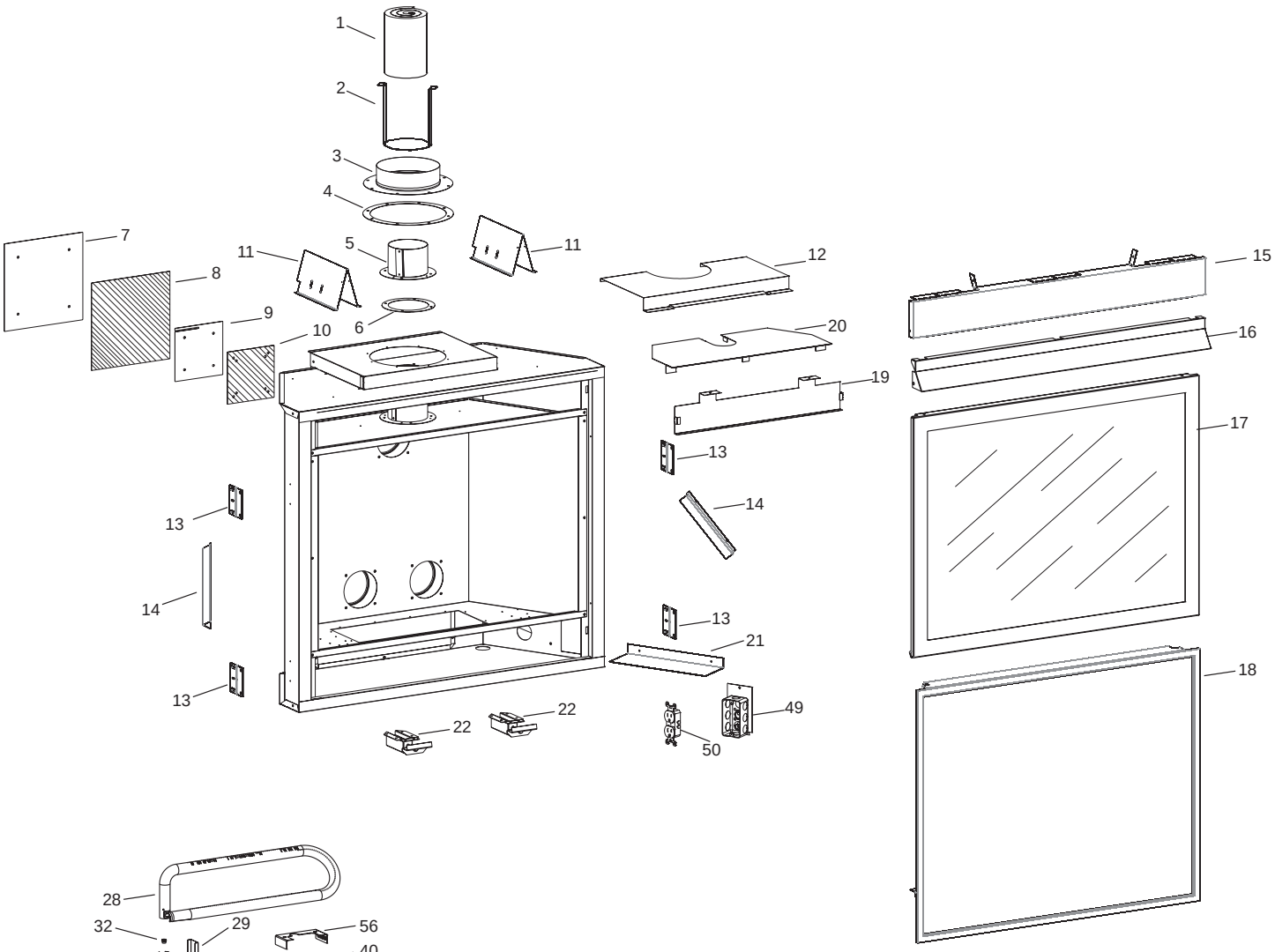


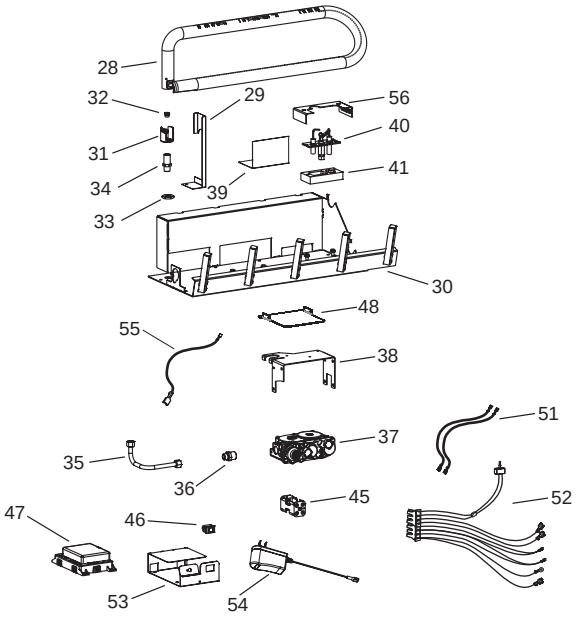


INTERMITTENT PILOT BURNER ASSEMBLY

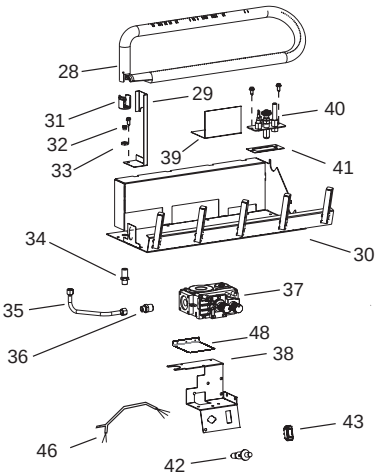


MILLIVOLT BURNER ASSEMBLY

**⚠ WARNING**

**Failure to position the parts in accordance with these diagrams or failure to use only parts specifically approved with this fireplace may result in property damage or personal injury.**

# DVCD36FP(3,7) PARTS LIST

| INDEX NO. | PART NUMBER | | DESCRIPTION |
|---|---|---|---|
| | MV (FP3) | IP (FP7) | |
| 1 | R7654 | R7654 | Flue Insulation |
| 2 | 17425 | 17425 | Flue Insulation Retainer |
| 3 | R7566 | R7566 | Inlet Vent Adaptor |
| 4 | R7573 | R7573 | Inlet Vent Gasket |
| 5 | 17155 | 17155 | Flue Outlet Assembly |
| 6 | M163 | M163 | Flue Connector Gasket |
| 7 | 17142 | 17142 | Vent Cover Plate |
| 8 | R7575 | R7575 | Vent Cover Plate Gasket |
| 9 | 17141 | 17141 | Flue Cover Plate |
| 10 | R7574 | R7574 | Flue Outlet Gasket |
| 11 | 23219 | 23219 | Top Standoff (2 Required) |
| 12 | 36179 | 36179 | Top Shield |
| 13 | 28688 | 28688 | Nailing Flange (4 Required) |
| 14 | 36190 | 36190 | Side Standoff (2 Required) |
| 15 | 36195 | 36195 | Top Panel |
| 16 | 37021 | 37021 | Hood (Canopy) |
| 17 | 17134 | 17134 | Glass Door Frame Assembly |
| 18 | 36172 | 36172 | Barrier Screen Assembly |
| 19 | 17143 | 17143 | Baffle, Flue Vent |
| 20 | 36198 | 36198 | Heat Shield, Firebox |
| 21 | 17357 | 17357 | Junction Box Shield |
| 22 | 29057 | 29057 | Spring Latch Assembly |
| 28 | R7537 | R7537 | Burner Tube |
| 29 | 17235 | 17235 | Log Locator Bracket |
| 30 | 33951 | 33951 | Burner Base Plate Assembly |
| 31 | R7624 | R7624 | Air Shutter |
| 32 | P288 | P288 | Orifice Natural Gas |
| 32 | P182 | P182 | Orifice Propane Gas |
| 33 | R7572 | R7572 | Jamb Nut |
| 34 | P212 | P212 | Orifice Fitting |
| 35 | 17258 | 31570 | Tubing Assembly, Inlet |
| 36 | R2423 | R2423 | Male connector |
| 37 | R7577 | R11125 | Gas Valve Natural Gas |
| 37 | R7578 | R11126 | Gas Valve Propane Gas |
| 38 | 17161 | 29400 | Valve Bracket |
| 39 | 17318 | 17318 | Pilot Shield |
| 40 | R7612 | R10423 | Pilot Assembly Natural Gas |
| 40 | R7611 | R10424 | Pilot Assembly Propane Gas |
| 41 | R7617 | R9189 | Pilot Gasket |
| 42 | R9760 | N/A | Piezo Ignitor |
| 43 | R3436 | N/A | Remote OFF/ON Switch |
| 44 | R10947 | N/A | Wire Assembly |
| 45 | N/A | R11122 | Battery Holder |

| INDEX NO. | PART NUMBER | | DESCRIPTION |
|---|---|---|---|
| | MV (FP3) | IP (FP7) | |
| 46 | N/A | R2522 | ON/OFF Switch |
| 47 | N/A | R11127 | Control Module |
| 48 | 36177 | 34109 | Valve Heat Shield |
| 49 | 17162 | 17162 | Junction Box Assembly |
| 50 | R3492 | R3492 | Receptacle, 3-Prong |
| 51 | N/A | R2566 | Wire 5-1/2 inch Black (Switch) (2 Required) |
| 52 | N/A | R11123 | Wire Harness (Control Module) |
| 53 | N/A | 29382 | Tray, Control Module |
| 54 | N/A | R11128 | AC Adaptor, 7.0 VDC |
| 55 | N/A | R11034 | Wire Assembly (Sensor Adapter) |
| 56 | N/A | 31300 | Pilot Bracket |
| NS | 28373 | 28373 | Log Set |
| NS | R3491 | R3491 | Junction box Cover |
| NS | 18704 | 18704 | Decorative Rock |
| NS | 15999 | 15999 | RockWool (2 req) |
| NS | R7591 | R7591 | Flex Line |

N/A - Not applicable for that model
NS - Not shown on the parts view

**See Page 49 for Log Part Numbers, Page 50 for Log Postions.**

**USE ONLY MANUFACTURER'S REPLACEMENT PARTS. USE OF ANY OTHER PARTS COULD CAUSE INJURY OR DEATH.**

# DVCD36FP(3,7) PARTS VIEW

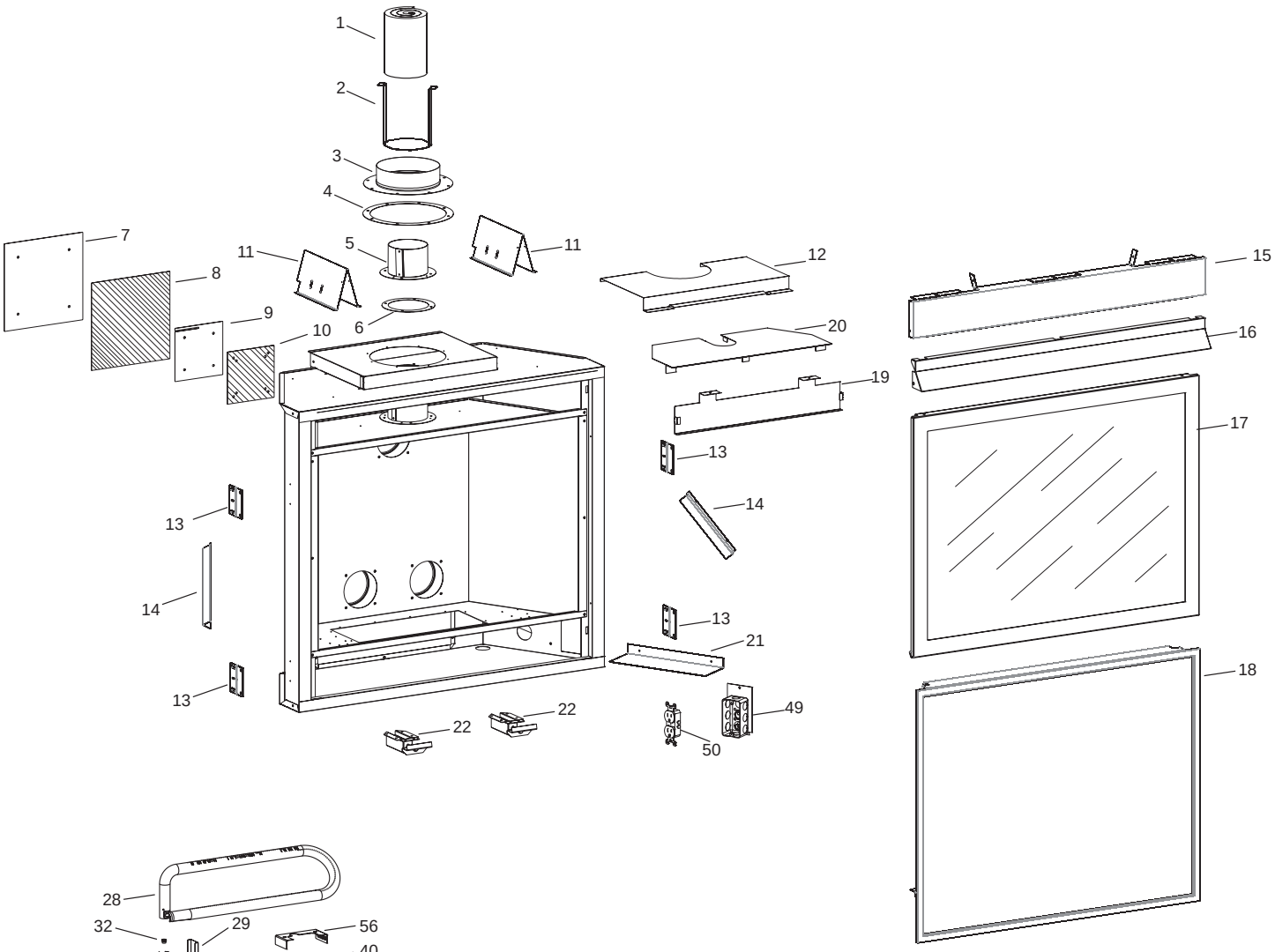


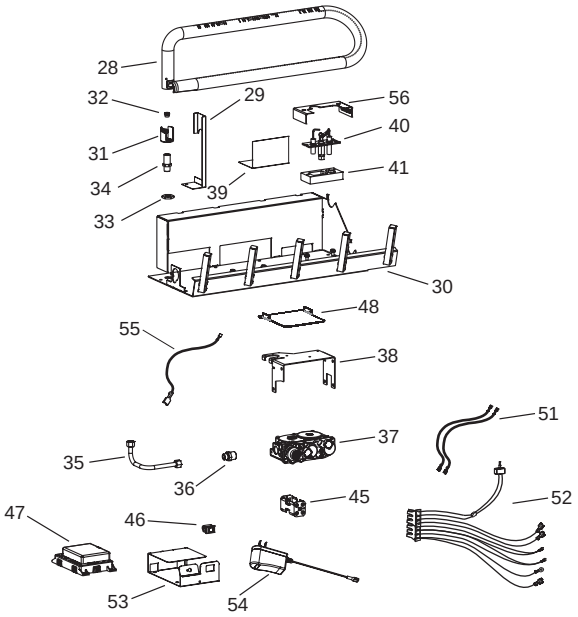


INTERMITTENT PILOT BURNER ASSEMBLY

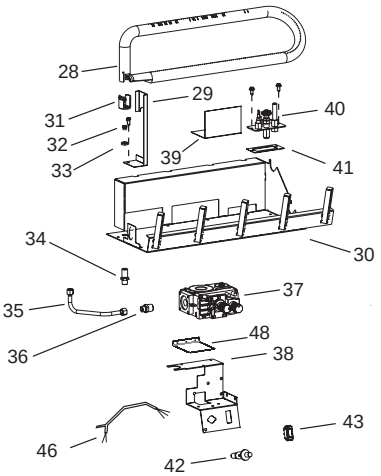


MILLIVOLT BURNER ASSEMBLY

**⚠ WARNING**

**Failure to position the parts in accordance with these diagrams or failure to use only parts specifically approved with this fireplace may result in property damage or personal injury.**

# DVCD42FP(3,7) PARTS LIST

| INDEX NO. | PART NUMBER | | DESCRIPTION |
|---|---|---|---|
| | MV (FP3) | IP (FP7) | |
| 1 | R7654 | R7654 | Flue Insulation |
| 2 | 17425 | 17425 | Flue Insulation Retainer |
| 3 | R7566 | R7566 | Inlet Vent Adaptor |
| 4 | R7573 | R7573 | Inlet Vent Gasket |
| 5 | 17155 | 17155 | Flue Outlet Assembly |
| 6 | M163 | M163 | Flue Connector Gasket |
| 7 | 17142 | 17142 | Vent Cover Plate |
| 8 | R7575 | R7575 | Vent Cover Plate Gasket |
| 9 | 17141 | 17141 | Flue Cover Plate |
| 10 | R7574 | R7574 | Flue Outlet Gasket |
| 11 | 23219 | 23219 | Top Standoff (2 Required) |
| 12A | 36179 | 36179 | Top Shield (up to serial # 164000000) |
| 12B | 17319 | 17319 | Top Shield |
| 13 | 28688 | 28688 | Nailing Flange (4 Required) |
| 14 | 36190 | 36190 | Side Standoff (2 Required) |
| 15 | 36196 | 36196 | Top Panel |
| 16 | 37022 | 37022 | Hood (Canopy) |
| 17 | 17190 | 17190 | Glass Door Frame Assembly |
| 18 | 36173 | 36173 | Barrier Screen Assembly |
| 19 | 17197 | 17197 | Baffle, Flue Vent |
| 20 | 36199 | 36199 | Heat Shield, Firebox |
| 21 | 17357 | 17357 | Junction Box Shield |
| 22 | 29057 | 29057 | Spring Latch Assembly |
| 28 | R7695 | R7695 | Burner Tube |
| 29 | 21260 | 21260 | Log Locator Bracket |
| 30 | 33952 | 33952 | Burner Base Plate Assembly |
| 31 | R7624 | R7624 | Air Shutter |
| 32 | P286 | P286 | Orifice Natural Gas |
| 32 | P208 | P208 | Orifice Propane Gas |
| 33 | R7572 | R7572 | Jamb Nut |
| 34 | P212 | P212 | Orifice Fitting |
| 35 | 17337 | 31571 | Tubing Assembly, Inlet |
| 36 | R2423 | R2423 | Male connector |
| 37 | R7577 | R11125 | Gas Valve Natural Gas |
| 37 | R7578 | R11126 | Gas Valve Propane Gas |
| 38 | 17161 | 29400 | Valve Bracket |
| 39 | 17318 | 17318 | Pilot Shield |
| 40 | R7612 | R10423 | Pilot Assembly Natural Gas |
| 40 | R7611 | R10424 | Pilot Assembly Propane Gas |
| 41 | R7617 | R9189 | Pilot Gasket |
| 42 | R9760 | N/A | Piezo Ignitor |
| 43 | R3436 | N/A | Remote OFF/ON Switch |

| INDEX NO. | PART NUMBER | | DESCRIPTION |
|---|---|---|---|
| | MV (FP3) | IP (FP7) | |
| 44 | R10947 | N/A | Wire Assembly |
| 45 | N/A | R11122 | Battery Holder |
| 46 | N/A | R2522 | ON/OFF Switch |
| 47 | N/A | R11127 | Control Module |
| 48 | 36177 | 34109 | Valve Heat Shield |
| 49 | 17162 | 17162 | Junction Box Assembly |
| 50 | R3492 | R3492 | Receptacle, 3-Prong |
| 51 | N/A | R2566 | Wire 5-1/2 inch Black (Switch) (2 Required) |
| 52 | N/A | R11123 | Wire Harness (Control Module) |
| 53 | N/A | 29382 | Tray, Control Module |
| 54 | N/A | R11128 | AC Adaptor, 7.0 VDC |
| 55 | N/A | R11034 | Wire Assembly (Sensor Adapter) |
| 56 | N/A | 31300 | Pilot Bracket |
| NS | 28380 | 28380 | Log Set |
| NS | R3491 | R3491 | Junction box Cover |
| NS | 18704 | 18704 | Decorative Rock |
| NS | 15999 | 15999 | RockWool (2 required) |
| NS | R7591 | R7591 | Flex Line |

N/A - Not applicable for that model
NS - Not shown on the parts view

**See Page 58 for Log Part Numbers, Page 59 for Log Postions.**

**USE ONLY MANUFACTURER'S REPLACEMENT PARTS. USE OF ANY OTHER PARTS COULD CAUSE INJURY OR DEATH.**

# DVCD42FP(3,7) PARTS VIEW

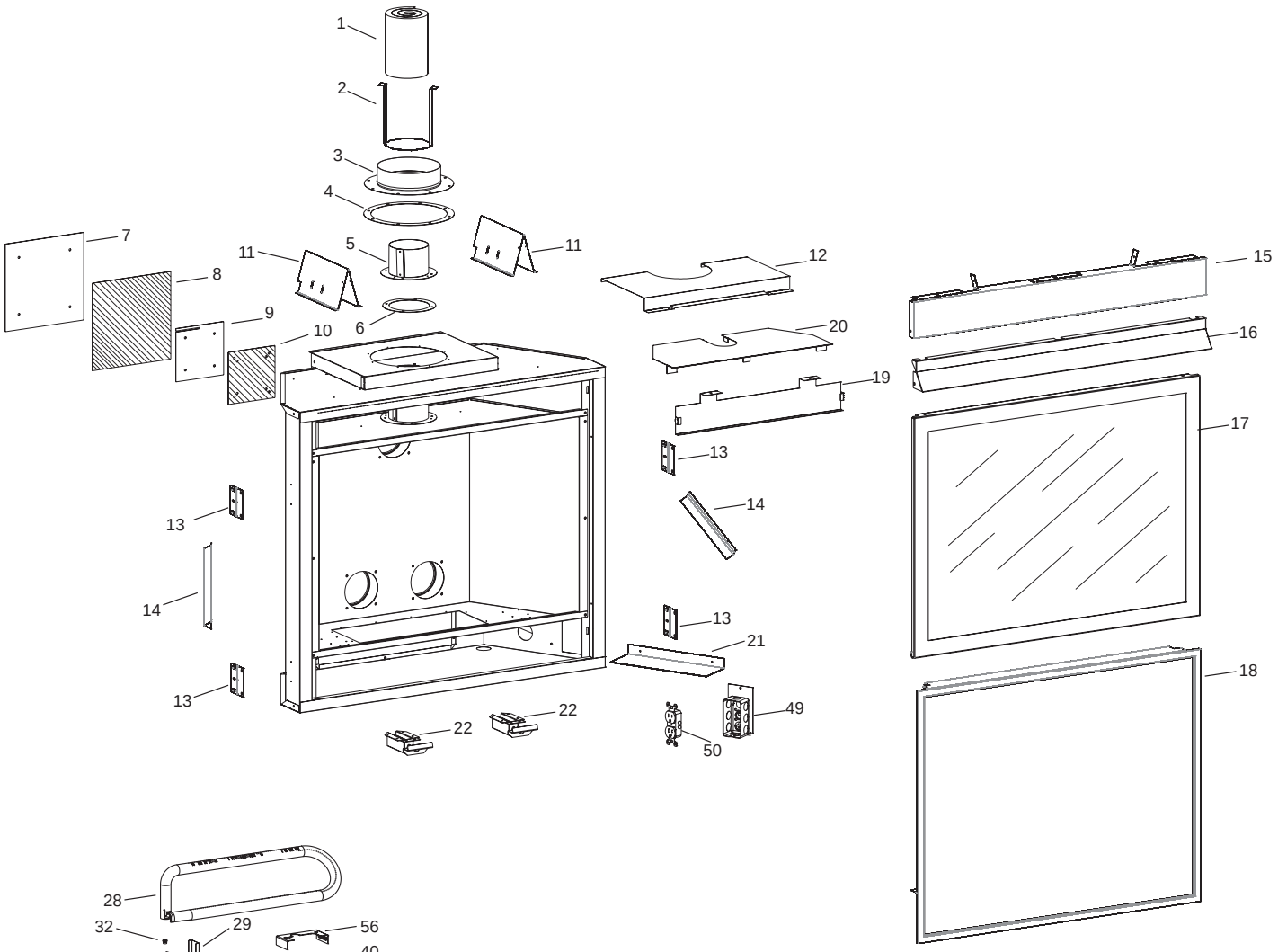


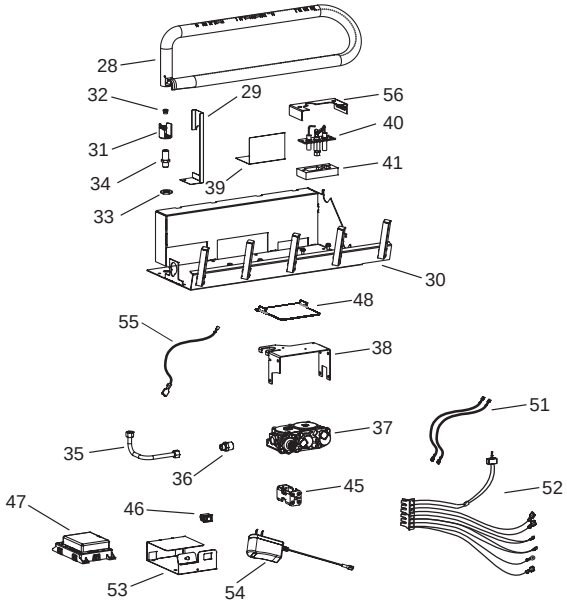


INTERMITTENT PILOT BURNER ASSEMBLY

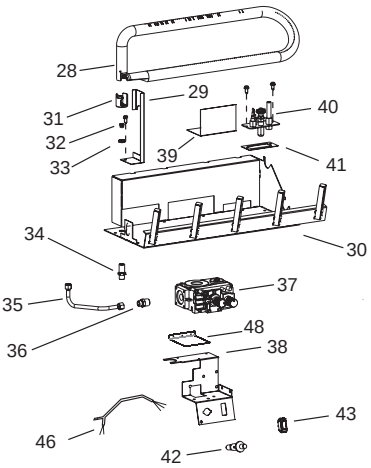


MILLIVOLT BURNER ASSEMBLY

**⚠ WARNING**

**Failure to position the parts in accordance with these diagrams or failure to use only parts specifically approved with this fireplace may result in property damage or personal injury.**

# IMPORTANT SAFETY INFORMATION

**Before enclosing the vent pipe assembly, operate the appliance to ensure it is venting properly.**

DO NOT OPERATE THIS APPLIANCE WITHOUT GLASS FRONT PANEL INSTALLED

**WARNING**

1. "Due to high temperatures, the appliance should be located out of traffic and away from furniture and draperies."
2. "Children and adults should be alerted to the hazards of high surface temperature and should stay away to avoid burns or clothing ignition."
3. "Young children should be carefully supervised when they are in the same room as the appliance. Toddlers, young children, and others may be susceptible to accidental contact burns. A physical barrier is recommended if there are at-risk individuals in the house. To restrict access to a fireplace or stove, install an adjustable safety gate to keep toddlers, young children, and other at-risk individuals out of the room and away from hot surfaces."
4. For appliances requiring a barrier, as determined under Clause 5.15.4: "A barrier designed to reduce the risk of burns from the hot viewing glass is provided with this appliance and shall be installed for the protection of children and other at-risk individuals."
5. "If the barrier becomes damaged, the barrier shall be replaced with the manufacturer's barrier for this appliance."
6. "Clothing or other flammable material should not be placed on or near the appliance."
7. "Any safety screen, guard, or barrier removed for servicing an appliance must be replaced prior to operating the appliance" (see Clause 4.1.6).
8. "Installation and repair should be done by a qualified service person. The appliance should be inspected before use and at least annually by a professional service person. More frequent cleaning might be required due to excessive lint from carpeting, bedding material, et cetera. It is imperative that control compartments, burners, and circulating air passageways of the appliance be kept clean."
9. The instructions for an appliance optionally for use with glass doors (or equivalent) shall state that, "Only doors certified with the appliance shall be used."
10. The instructions for an appliance not intended for use with glass doors (or equivalent) shall emphasize that the appliance is not for use with glass doors.
11. Where applicable, provide a means by which the consumer can identify the barrier, (such as graphic representation, clear description, or reference marking).

**WARNING**

**CARBON MONOXIDE POISONING HAZARD**

Failure to follow the steps outlined below for each appliance connected to the venting system being placed into operation could result in carbon monoxide poisoning or death. The following steps shall be followed for each appliance connected to the venting system being placed into operation, while all other appliances connected to the venting system are not in operation:

1. Seal any unused openings in the venting system.
2. Inspect the venting system for proper size and horizontal pitch, as required in the *National Fuel Gas Code ANSI Z223.1/NFPA 54* or *the National Gas and Propane Installation Code* CSA B149.1 and these instructions. Determine that there is no blockage or restriction, leakage, corrosion and other deficiencies which could cause an unsafe condition.
3. As far as practical, close all building doors and windows and all doors between the space in which the appliance(s) connected to the venting system are located and other spaces of the building.
4. Close fireplace dampers.
5. Turn on clothes dryers and any appliance not connected to the venting system. Turn on any exhaust fans, such as range hoods and bathroom exhausts, so they are operating at maximum speed. Do not operate a summer exhaust fan.
6. Follow the lighting instructions. Place the appliance being inspected into operation. Adjust the thermostat so appliance is operating continuously.
7. Test for spillage from draft hood equipped appliances at the draft hood relief opening after 5 minutes of main burner operation. Use the flame of a match or candle.
8. If improper venting is observed during any of the above tests, the venting system must be corrected in accordance with *National Fuel Gas Code*, ANSI Z223.1/NFPA and/or *National Gas and Propane Installation Code*, CSA B149.1.
9. After it has been determined that each appliance connected to the venting system properly vents when tested as outlined above, return doors, windows, exhaust fans, fireplace dampers and any other gas-fired burning appliance to their previous conditions of use.

# SAFETY INFORMATION FOR USERS OF PROPANE GAS

**Propane is a flammable gas which can cause fires and explosions. In its natural state, propane is odorless and colorless. You may not know all the following safety precautions which can protect both you and your family from an accident. Read them carefully now, then review them point by point with the members of your household. Someday when there may not be a minute to lose, everyone's safety will depend on knowing exactly what to do. If, after reading the following information, you feel you still need more information, please contact your gas supplier.**

**PROPANE GAS WARNING ODOR**

**If a gas leak happens, you should be able to smell the gas because of the odorant put in the Propane Gas. That's your signal to go into immediate action!**

- Do not operate electric switches, light matches, or use your phone. Do not do anything that could ignite the gas.
- Get everyone out of the building, vehicle, trailer, or area. Do that IMMEDIATELY.
- Close all gas tank or cylinder supply valves.
- Propane Gas is heavier than air and may settle in low areas such as basements. When you have reason to suspect a gas leak, keep out of basements and other low areas. Stay out until firefighters declare them to be safe.
- Use your neighbor's phone and call a trained Propane Gas service person and the fire department. Even though you may not continue to smell gas, do not turn on the gas again. Do not re-enter the building, vehicle, trailer, or area.
- **Finally,** let the service man and firefighters check for escaped gas. Have them air out the area before you return. Properly trained Propane Gas service people should repair the leak, then check and relight the gas fireplace for you.

**NO ODOR DETECTED - ODOR FADE**

**Some people cannot smell well. Some people cannot smell the odor of the chemical put into the gas. You must find out if you can smell the odorant in propane.** Smoking can decrease your ability to smell. Being around an odor for a time can affect your sensitivity or ability to detect that odor. Sometimes other odors in the area mask the gas odor. People may not smell the gas odor or their minds are on something else. Thinking about smelling a gas odor can make it easier to smell.

**The odorant in Propane Gas is colorless, and it can fade under some circumstances.** For example, if there is an underground leak, the movement of the gas through soil can filter the odorant. Odorants in Propane Gas also are subject to oxidation. This fading can occur if there is rust inside the storage tank or in iron gas pipes.

The odorant in escaped gas can adsorb or absorb onto or into walls, masonry and other materials and fabrics in a room. That will take some of the odorant out of the gas, reducing its odor intensity.

Propane Gas may stratify in a closed area, and the odor intensity could vary at different levels. Since it is heavier than air, there may be more odor at lower levels. Always be sensitive to the slightest gas odor. If you detect any odor, treat it as a serious leak. Immediately go into action as instructed earlier.

**SOME POINTS TO REMEMBER**

- **Learn to recognize the odor of Propane Gas.** Your local Propane Gas Dealer can give you a "Scratch and Sniff" pamphlet. Use it to find out what the propane odor smells like. If you suspect that your Propane Gas has a weak or abnormal odor, call your Propane Gas Dealer.
- If you are not qualified, do not light pilot lights, perform service, or make adjustments to appliances on the Propane Gas system. If you are qualified, consciously think about the odor of Propane Gas prior to and while lighting pilot lights or performing service or making adjustments.
- Sometimes a basement or a closed-up house has a musty smell that can cover up the Propane Gas odor. Do not try to light pilot lights, perform service, or make adjustments in an area where the conditions are such that you may not detect the odor if there has been a leak of Propane Gas.
- Odor fade, due to oxidation by rust or adsorption on walls of new cylinders and tanks, is possible. Therefore, people should be particularly alert and careful when new tanks or cylinders are placed in service. Odor fade can occur in new tanks, or reinstalled old tanks, if they are filled and allowed to set too long before refilling. Cylinders and tanks which have been out of service for a time may develop internal rust which will cause odor fade. If such conditions are suspected to exist, a periodic sniff test of the gas is advisable. **If you have any question about the gas odor, call your Propane Gas Dealer. A periodic sniff test of the Propane Gas is a good safety measure under any condition.**
- If, at any time, you do not smell the Propane Gas odorant and you think you should, assume you have a leak. Then take the same immediate action recommended above for the occasion when you do detect the odorized Propane Gas.
- If you experience a complete "gas out," (the container is under no vapor pressure), turn the tank valve off immediately. If the container valve is left on, the container may draw in some air through openings such as pilot light orifices. If this occurs, some new internal rusting could occur. If the valve is left open, then treat the container as a new tank. Always be sure your container is under vapor pressure by turning it off at the container before it goes completely empty or having it refilled before it is completely empty.

# REQUIREMENTS FOR MASSACHUSETTS

For all side wall horizontally vented gas fueled equipment installed in every dwelling, building or structure used in whole or in part for residential purposes, including those owned or operated by the Commonwealth and where the side wall exhaust vent termination is less than seven feet above finished grade in the area of the venting, including but not limited to decks and porches, the following requirements shall be satisfied:

1. INSTALLATION OF CARBON MONOXIDE DETECTORS. At the time of installation of the side wall horizontal vented gas fueled equipment, the installing plumber or gasfitter shall observe that a hard wired carbon monoxide detector with an alarm and battery back-up is installed on the floor level where the gas equipment is to be installed. In addition, the installing plumber or gasfitter shall observe that a battery operated or hard wired carbon monoxide detector with an alarm is installed on each additional level of the dwelling, building or structure served by the side wall horizontal vented gas fueled equipment. It shall be the responsibility of the property owner to secure the services of qualified licensed professionals for the installation of hard wired carbon monoxide detectors
   a. In the event that the side wall horizontally vented gas fueled equipment is installed in a crawl space or an attic, the hard wired carbon monoxide detector with alarm and battery back-up may be installed on the next adjacent floor level.
   b. In the event that the requirements of this subdivision can not be met at the time of completion of installation, the owner shall have a period of thirty days to comply with the above requirements; provided, however, that during said thirty day period, a battery operated carbon monoxide detector with an alarm shall be installed.

2. APPROVED CARBON MONOXIDE DETECTORS. Each carbon monoxide detector as required in accordance with the above provisions shall comply with NFPA 720 and be ANSI/UL 2034 listed and IAS certified.

3. SIGNAGE. A metal or plastic identification plate shall be permanently mounted to the exterior of the building at a minimum height of eight feet above grade directly in line with the exhaust vent terminal for the horizontally vented gas fueled heating fireplace or equipment. The sign shall read, in print size no less than 1/2 inch in size, "**GAS VENT DIRECTLY BELOW. KEEP CLEAR OF ALL OBSTRUCTIONS**".

4. INSPECTION. The state or local gas inspector of the side wall horizontally vented gas fueled equipment shall not approve the installation unless, upon inspection, the inspector observes carbon monoxide detectors and signage installed in accordance with the provisions of 248 CMR 5.08(2)(a) 1 through 4.
   (b) EXEMPTIONS: The following equipment is exempt from 248 CMR 5.08(2)(a)1 through 4:
      1. The equipment listed in Chapter 10 entitled "Equipment Not Required To Be Vented" in the most current edition of NFPA 54 as adopted by the Board; and
      2. Product Approved side wall horizontally vented gas fueled equipment installed in a room or structure separate from the dwelling, building or structure used in whole or in part for residential purposes.
   (d) MANUFACTURER REQUIREMENTS - GAS EQUIPMENT VENTING SYSTEM NOT PROVIDED. When the manufacturer of a Product Approved side wall horizontally vented gas fueled equipment does not provide the parts for venting the flue gases, but identifies "special venting systems", the following requirements shall be satisfied by the manufacturer:
      1. The referenced "special venting system" instructions shall be included with the fireplace or equipment installation instructions; and
      2. The "special venting systems" shall be Product Approved by the Board, and the instructions for that system shall include a parts list and detailed installation instruction.
   (e) A copy of all installation instructions for all Product Approved side wall horizontally vented gas fueled equipment, all venting instructions, all parts lists for venting instructions, and/or all venting design instructions shall remain with the fireplace or equipment at the completion of the installation.

# MASTER PARTS DISTRIBUTOR LIST

To Order Parts Under Warranty, please contact your local Empire dealer. See the dealer locator at www.empirecomfort.com. To provide warranty service, your dealer will need your name and address, purchase date and serial number, and the nature of the problem with the fireplace.
To Order Parts After the Warranty Period, please contact your dealer or one of the Master Parts Distributors listed below. This list changes from time to time. For the current list, please click on the Master Parts button at www.empirecomfort.com. Please ***NOTICE***: Master Parts Distributors are independent businesses that stock the most commonly ordered Original Equipment repair parts for Heaters, Grills, and Fireplaces manufactured by Empire Comfort Systems.

**Dey Distributing**
1401 Willow Lake Boulevard
Vadnais Heights, MN 55101

**Phone:** 651-490-9191
**Toll Free:** 800-397-1339
**Website:** www.deydistributing.com
**Parts: Heater, Hearth and Grills**

**F. W. Webb Company**
200 Locust Street
Hartford, CT 06114

**Phone:** 860-722-2433
**Toll Free:** 800-243-9360
**Fax:** 860-293-0479
**Toll Free Fax:** 800-274-2004
**Websites:** www.fwwebb.com & www.victormfg.com
**Parts: Heater, Hearth and Grills**

**East Coast Energy Products**
10 East Route 36
West Long Branch, NJ 07764

**Phone:** 732-870-8809
**Toll Free:** 800-755-8809
**Fax:** 732-870-8811
**Website:** www.eastcoastenergy.com
**Parts: Heater, Hearth and Grills**

# HOW TO ORDER REPAIR PARTS

**Parts Not Under Warranty**

Parts can be ordered through your Service Person, Dealer, or a Master Parts Distributor. See this page for the Master Parts Distributors list. For best results, the **service person or dealer** should order parts through the distributor. Parts can be shipped directly to the **service person/dealer**.

**Warranty Parts**

Warranty parts will need a proof of purchase and can be ordered by your Service Person or Dealer. Proof of purchase is **required** for warranty parts.

All parts listed in the Parts List have a Part Number. When ordering parts, first obtain the Model Number and Serial Number from the name plate on your equipment. Then determine the Part Number (**not** the Index Number) and the Description of each part from the following illustration and part list. Be sure to give all this information . . .

Fireplace Model Number _____ Part Description _____

Fireplace Serial Number _____ Part Number _____

Type of Gas (Propane or Natural) _____

Do not order bolts, screws, washers or nuts. They are standard hardware items and can be purchased at any local hardware store.

Shipments contingent upon strikes, fires and all causes beyond our control.

# WARRANTY

Empire Comfort Systems Inc. warranties this hearth product to be free from defects at the time of purchase and for the periods specified below. This warranty applies to the original purchaser only and is not transferable. All warranty repairs must be accomplished by a qualified gas appliance technician.

***Limited Lifetime Parts Warranty – Factory-Installed Glass***

If factory-installed glass fails because of defective workmanship or material, Empire will repair or replace it at Empire's option.

***Limited Lifetime Parts Warranty – Combustion Chamber, Heat Exchanger***

If the combustion chamber or heat exchanger (see parts list) fails because of defective workmanship or material, Empire will repair or replace it at Empire's option.

***Limited Three-Year Parts Warranty – All Other Components (Except Remote Controls, Thermostats, Lights, Accessories and Replacement Parts)***

Should any part fail because of defective workmanship or material within three years from the date of purchase, Empire will repair or replace it at Empire's option.

***Limited One-Year Parts Warranty – Remote Controls, Thermostats, Lights, Accessories, and Replacement Parts***

Should any remote control, thermostat, lighting system, accessory, or replacement part fail because of defective workmanship within one year from the date of purchase, Empire will repair or replace it at Empire's option.

***Duties of the Owner***

Have the appliance installed by a qualified installer, and operate and maintain it in accordance with the furnished instructions
Provide proof of purchase (receipt) to establish the purchase date, which determines the warranty start date.
Provide ready access to the appliance for service.

***What Is Not Covered***

Damage caused by misuse or improper installation.
Damage caused by improper maintenance or lack of maintenance.
Claims that do not involve defective workmanship or materials.
Unauthorized service or replacement parts.
Travel, diagnostic costs and freight charges on warranted parts to and from the factory.
Removal and reinstallation cost.

***How to Get Service***

Provide the dealer with the model number, serial number, type of gas, and proof of purchase. The installing dealer is responsible for providing service and will contact the factory to initiate any warranted parts replacements. Empire will make replacement parts available at the factory. Shipping expenses are not covered.
If, after contacting your Empire dealer, the service received has not been satisfactory, send an e-mail describing the issue and any actions taken to info@empirecomfort.com with "Consumer Relations" in the subject line.

***Your Rights under State Law***

This warranty gives you specific legal rights, and you may also have other rights, which vary from state to state.

# APPLIANCE SERVICE HISTORY

| Date | Dealer Name | Service Technician Name | Service Performed/Notes |
|---|---|---|---|
| | | | |
| | | | |
| | | | |
| | | | |
| | | | |
| | | | |
| | | | |
| | | | |
| | | | |
| | | | |
| | | | |

# APPLIANCE SERVICE HISTORY

| Date | Dealer Name | Service Technician Name | Service Performed/Notes |
|---|---|---|---|
| | | | |
| | | | |
| | | | |
| | | | |
| | | | |
| | | | |
| | | | |
| | | | |
| | | | |
| | | | |
| | | | |

# APPLIANCE SERVICE HISTORY

| Date | Dealer Name | Service Technician Name | Service Performed/Notes |
|---|---|---|---|
| | | | |
| | | | |
| | | | |
| | | | |
| | | | |
| | | | |
| | | | |
| | | | |
| | | | |
| | | | |
| | | | |

**Empire Comfort Systems Inc.**
**Belleville, IL**

If you have a general question about our products, please e-mail us at info@empirecomfort.com.

If you have a service or repair question, please contact your dealer.

**www.empirecomfort.com**